CITY OF WILDOMAR
PLANNING COMMISSION AGENDA

Chairman Harv Dykstra; Vice-Chairman Stan Smith
Robert Devine; Michael Kazmier; Veronica Langworthy

REGULAR MEETING

WEDNESDAY, NOVEMBER 2, 2011 AT 7:00 P.M.

Council Chambers, Wildomar City Hall, 23873 Clinton Keith Road, Wildomar, CA 92595

CALL TO ORDER - 7:00 PM

ROLL CALL

FLAG SALUTE

PUBLIC COMMENTS

This is the time for citizens to comment on issues not on the agenda. Under the provision of the Brown Act the Planning Commission is prohibited from discussing or taking action on items not on the agenda. Each speaker is asked to fill out a "Public Comments Card" (located on the table by the Chamber door) and give the card to the Planning Commission Chairperson prior to the start of the meeting. Lengthy testimony should be presented to the Planning Commission in writing (8 copies) and only pertinent points presented orally. Comments are limited to three (3) minutes per speaker. The Commission encourages citizens to address them so the questions and/or comments can be heard.

APPROVAL OF THE AGENDA AS SUBMITTED

1.0 CONSENT CALENDAR

All maters listed under the Consent Calendar are considered routine and will be enacted by one roll call vote. There will be no separate discussion of these items unless members of the Commission, the public, or staff request specific items be removed from the Consent Calendar for discussion and/or separate action.

1.1 Minutes – July 6, 2011 Regular Meeting

RECOMMENDATION: Staff recommends that the Planning Commission approve the Minutes as submitted.

2.0 PUBLIC HEARINGS

There are no Public Hearings scheduled.

3.0 GENERAL BUSINESS

3.1 City Trails Program

RECOMMENDATION: Staff recommends that the Planning Commission recommend that the City Council adopt the following:

1) City Trails Map with Trail Names;
2) Trail Design Guidelines
3) Adopt a Trail Program; and
4) Establish Trails Commissioner role

PLANNING DIRECTOR'S REPORT

PLANNING COMMISSION COMMUNICATIONS

FUTURE AGENDA ITEMS

ADJOURNMENT

RIGHT TO APPEAL:
Any decision of the Planning Commission may be appealed to the City Council provided the required appeal application and the $964 filing fee is submitted to the City Clerk within ten (10) calendar days proceeding the Planning Commission's action on any given project.

REPORTS:
All agenda items and reports are available for review at Wildomar City Hall, 23873 Clinton Keith Road, Suite 201, Wildomar, California 92595. Any writings or documents provided to a majority of the Planning Commission regarding any item on this agenda (other than writings legally exempt from public disclosure) will be made available for public inspection at City Hall during regular business hours. If you wish to be added to the regular mailing list to receive a copy of the agenda, a request must be made through the Planning Department in writing or by e-mail.

ADDITIONS/DELETIONS:
Items of business may be added to the agenda upon a motion adopted by a minimum 2/3 vote finding that there is a need to take immediate action and that the need for action came to the attention of the City subsequent to the agenda being posted. Items may be deleted from the agenda upon request of staff or upon action of the Planning Commission.

ADA COMPLIANCE:
If requested, the agenda and backup materials will be made available in appropriate alternative formats to persons with a disability, as required by Section 202 of the Americans With Disabilities Act of 1990 (42 U.S.C. Sec. 12132), and the federal rules and regulations adopted in implementation thereof. Any person who requires a disability-related modification or accommodation, including auxiliary aids or services, in order to participate in the public meeting may request such modification, accommodation, aid or service by contacting the Planning Department either in person or by telephone at (951) 667-7751, no later than 10:00 A.M. on the day preceding the scheduled meeting.

POSTING STATEMENT:
On October 27, 2011, by 5:00 p.m. a true and correct copy of this agenda was posted at the three designated places: 1) Wildomar City Hall, 23873 Clinton Keith Road; 2) United States Post Office, 21392 Palomar Street; and 3) Mission Trail Library, 34303 Mission Trail.

AGENDA ITEM #1.1

CITY OF WILDOMAR
PLANNING COMMISSION REGULAR MEETING MINUTES
JULY 6, 2011

CALL TO ORDER – 7:00 P.M.

The regular meeting of July 6, 2011, of the Wildomar Planning Commission was called to order by Chairman Dykstra at 7:00 p.m. at the City Hall Council Chambers, 23873 Clinton Keith Road, Wildomar, California.

Planning Commission Roll Call showed the following Members in attendance: Chairman Dykstra, Vice Chairman Smith, Commissioners Devine, Kazmier, Langworthy. Members absent: None.

Staff in attendance: Planning Director Bassi, Assistant City Attorney Vega, and Assistant Planner Garcia.

The Flag Salute was led by Commissioner Devine.

PUBLIC COMMENTS

There were no speakers.

1.0 CONSENT CALENDAR

1.1. Approval of the May 4, 2011 Planning Commission Minutes

A MOTION was made by Vice Chairman Smith, seconded by Commissioner Devine, to approve the Minutes as submitted.

MOTION carried, 5-0.

2.0 PUBLIC HEARINGS

2.1 Plot Plan No. 10-0274 (Tabled from April 6, 2011)

Planning Director Bassi made a brief presentation of the events that have transpired from the April 6, 2011 Planning Commission meeting to the present.

Commissioner Devine asked if a future applicant submits an acceptable plan will they need to apply for the similar process.

Director Bassi replied in the affirmative.

Commissioner Kazmier commented if the applicant asked for an extension of time.

Director Bassi responded that he did not receive such a request either verbally or in writing from the applicant.

Chairman Dykstra opened the public hearing

SPEAKERS:

Gary Andre, resident, spoke in favor for the resolution for denial of the Plot Plan.

There being no further speakers Chairman Dykstra closed the public hearing.

Commissioner Langworthy stated she is in favor for recycling but applicants must adhere to the development standards of the zone.

Commissioner Devine stated he met with Mr. Lech at the subject site regarding the proposed project and agrees with Commissioner Langworthy's statement that applicants must comply with the city's development standards.

Vice Chairman Smith mentioned he has always been in favor for recycling and agrees with what the other Planning Commissioners mentioned.

Chairman Dykstra commented that he would like to give the applicant the opportunity to present their revised site plan and would not like to deny the project.

A MOTION was made by Commissioner Devine, seconded by Vice Chairman Smith, to adopt a Resolution entitled:

PC RESOLUTION NO. 11-01
A RESOLUTION OF THE PLANNING COMMISSION OF THE CITY OF WILDOMAR, CALIFORNIA UPHOLDING THE PLANNING DIRECTOR'S DECISION TO DENY PLOT PLAN NO. 10-0274 TO ESTABLISH A RECYCLING FACILITY ON AN EXISTING COMMERCIALLY ZONED SITE LOCATED AT 34395 MISSION TRAIL (APN: 370-090-035)

MOTION carried, 3-0, with Chairman Dykstra and Commissioner Kazmier dissenting.

2.2 Change of Zone & Plot Plan No. 10-0222 (Subway Retail Project)

Assistant Planner Garcia made the staff presentation summarizing the proposed Mitigated Negative Declaration (MND) and the Change of Zone and Plot Plan applications being consistent with the City's development standards for commercial/retail projects.

Director Bassi commented that supplemental conditions of approval from the Public Works Department were provided to the Planning Commission and that they were to be adopted with the Plot Plan resolution.

Commissioner Devine asked if the project meets Riverside County Fire Department standards.

Assistant Planner Garcia responded that the project was reviewed by the Fire Department and that the project did meet their standards. Also conditions of approval were provided and included in the Plot Plan resolution.

Commissioner Kazmier asked if the building will be stick-built.

Staff responded that according to the architect the building will be steel framed.

Commissioner Langworthy commented that an additional handicap parking stall will need to be added.

Director Bassi responded that the Building Department will ensure all required handicap stalls will be provided in compliance with the Uniform Building Code and confirmed during the plan check review process.

Chairman Dykstra opened the public hearing.

Sam Akbarpour, Project Engineer, made a brief presentation for the applicant and commented about the Fire review, clarifying that the project has been designed to meet all Fire Department design standards.

Dan Cline, Project Architect, elaborated on the projects' modern architectural design theme and that he believed the project will be compatible with existing commercial projects in the City. He also stated that the applicant has already been in negotiations with several tenants to occupy the building lease spaces on either side of the Subway lease space.

Mr. Akbarpour commented that the design team worked very closely with City staff to create a functional and aesthetically pleasing commercial retail project.

SPEAKERS:

George Taylor, resident, spoke in support of the project and the new businesses coming into the City, but expressed a desire that the project should have been designed with a ranch style western architecture.

Gary Andre, resident, spoke on the project and commented that the project site has flood issues and asked if the Riverside County Flood Control District reviewed the project. He also commented that he believed the noise from the A/C units would be a significant impact on the residences north of the site. He asked if staff addressed noise concerns.

Director Bassi responded that the MND did evaluate noise impacts from the project, and that A/C noise was considered a significant impact.

City Engineer Palmer responded that Riverside County Flood Control District did not review the project since it was not in their jurisdiction nor were there any facilities being proposed with the project that would have required their review. He further stated that a comprehensive Hydrology study and Water Quality Management Plan was prepared and evaluated by staff and the project has been conditioned to comply with all of the City's public works and engineering standards.

Sheryl Ade, resident, with minutes donated by Gil Rasmussen, stated that staff's power point presentation should have been uploaded to the City Website for public review prior to the meeting. She then commented about a previous commercial project on the site that was reviewed by Riverside County Planning Department that had flooding issues. Also, the MND should have been uploaded onto the City's website so it could have been reviewed by the general public.

Director Bassi clarified that the MND was posted on the City's website for public review twice. The first time was in December and the second time was in May. Public comments were received during the first review period; however, no comments were received during the second review period.

Ms. Ade stated that the project site has liquefaction issues and questioned whether staff evaluated this.

Director Bassi clarified that the MND did evaluate liquefaction and mitigation measures were being proposed that would require the applicant

to address these as part of the plan check process in coordination with the 2010 California Building Code requirements.

Maria Walker, resident, stated that she was excited to see a new eating establishment coming to the City and the job opportunities it will create.

Mr. Akbarpour responded to the comments raised by the speakers and summarized that the project was designed to meet the City's planning and engineering standards.

There being no further speakers Chairman Dykstra closed the public hearing.

Commissioner Devine commented that he had been to the site and noticed that the residence to the north seemed to be in close proximity to the proposed project, and asked if any buffering was being proposed.

Director Bassi responded that the project had a 9 to 10 foot setback from the north property line and that there would be a decorative block wall and landscaping to help buffer noise from the project to the residential property north of the site.

Chairman Dykstra asked if the rear wall of the building is a solid wall.

Mr. Cline responded in the affirmative. He also stated that the building will have fire sprinklers in accordance with Fire Department requirements.

Chairman Dykstra asked if the adjacent property north of the site had a General Plan Land Use designation of General Commercial.

Assistant Planner Garcia responded in the affirmative.

Additional comments from the Commission were presented.

A MOTION was made by Commissioner Kazmier, seconded by Vice Chairman Smith, to a Resolution entitled:

PC RESOLUTION NO. 11-06

A RESOLUTION OF THE PLANNING COMMISSION OF THE CITY OF WILDOMAR, CALIFORNIA RECOMMENDING CITY COUNCIL ADOPTION OF A MITIGATED NEGATIVE DECLARATION AND MITIGATION MONITORING PROGRAM FOR CHANGE OF ZONE AND PLOT PLAN NO. 10-0222 (SUBWAY RETAIL PROJECT) LOCATED AT 21940 BUNDY CANYON ROAD (APN: 366-390-026 and 366-390-027)

MOTION carried, 5-0.

A MOTION was made by Vice Chairman Smith, seconded by Commissioner Kazmier, to adopt a Resolution entitled:

PC RESOLUTION NO. 11-07
A RESOLUTION OF THE PLANNING COMMISSION OF THE CITY OF WILDOMAR, CALIFORNIA RECOMMENDING CITY COUNCIL APPROVAL OF PLANNING APPLICATION NO. 10-0222 FOR A CHANGE OF ZONE FROM R-R (RURAL RESIDENTIAL) TO C-1/C-P (GENERAL COMMERCIAL) AND A PLOT PLAN FOR THE DEVELOPMENT OF A 10,500 SQUARE-FOOT MULTI-TENANT RETAIL BUILDING (SUBWAY RETAIL PROJECT) LOCATED AT 21940 BUNDY CANYON ROAD (APN: 366-390-026 and 366-390-027)

MOTION carried, 5-0.

A MOTION was made by Commissioner Kazmier, seconded by Commissioner Devine, to adopt a Resolution entitled:

PC RESOLUTION NO. 11-08
A RESOLUTION OF THE PLANNING COMMISSION OF THE CITY OF WILDOMAR, CALIFORNIA RECOMMENDING CITY COUNCIL APPROVAL OF PLOT PLAN NO. 10-0222 FOR THE DEVELOPMENT OF A PROPOSED 10,500 SQUARE-FOOT MULTI-TENANT RETAIL BUILDING (SUBWAY RETAIL PROJECT) LOCATED AT 21940 BUNDY CANYON ROAD (APN: 366-390-026 and 366-390-027)

MOTION carried, 5-0.

3.0 GENERAL BUSINESS

3.1 Public Works Department - Capital Improvement Program for 2011 – 2016

Engineer Palmer made a brief presentation and noted that the Commission needed to make a determination that the projects listed in the City's Capital Improvement Program are consistent with the Wildomar General Plan.

Vice Chairman Smith asked why they need to approve the program.

Assistant City Attorney Vega responded that it is part of the Planning Commission's responsibilities to annually review the City's CIP program and make a determination of consistency with the General Plan.

George Taylor, resident, commented that Bundy Canyon is a safety hazard.

A MOTION was made by Vice Chairman Smith, seconded by Commissioner Kazmier, to adopt a Resolution entitled:

PC RESOLUTION NO. 11-09
A RESOLUTION OF THE PLANNING COMMISSION OF THE CITY OF WILDOMAR, CALIFORNIA DETERMINING THAT THE 2011-2016 CAPITAL IMPROVEMENT PROGRAM IS IN CONFORMANCE WITH THE WILDOMAR GENERAL PLAN

MOTION carried, 5-0.

PLANNING DIRECTORS REPORT

Director Bassi asked if the Planning Commission would like to start their Commission meetings at 6:30 p.m. to be consistent with the City Council.

Vice Chairman Smith commented he is fine with it.

Chairman Dykstra stated he opposes due to work hour conflicts.

Vice Chairman Smith asked what the reason was for the proposed change.

Director Bassi commented that it would decrease staff's time waiting for the meeting to start from 5:00 p.m. to 7:00 p.m. and to save money.

Vice Chairman Smith commented he is in favor if it will provide savings to the City.

Chairman Dykstra commented he is willing to accommodate but it will pose a difficulty on his work schedule.

Director Bassi commented that if the Chairman cannot come in on time, then staff will not move forward with the idea.

PLANNING COMMISSION COMMUNICATIONS

Vice Chairman Smith commented he has instructed Planning staff to not deliver his agenda packet to keep costs down and recommends this to the other Commissioners.

Director Bassi asked if the Commission could please consult with Planning Staff to schedule a delivery or pick up.

The Planning Commission responded in the affirmative.

Vice Chairman Smith commented he would also like to waive his Planning Commission compensation and have it go to the Park's fund.

Commissioner Devine asked staff how the waiver of his stipend would be processed.

Director Bassi responded he would consult with the Finance Director.

Assistant City Attorney Vega commented that she has processed and handled similar situations in other jurisdictions with Council and she will be working with City staff to get that accomplished.

Commissioner Langworthy would like to thank Sharon Heil and her husband for her thoughtful gifts she made for staff.

ADJOURNMENT

There being no further business, at 8:27 p.m. Chairman Dykstra adjourned the meeting.

Submitted by:	Approved by:
_____	_____
Matthew Bassi Secretary	Harv Dykstra Chairman

CITY OF WILDOMAR – Planning Commission
Agenda Item #3.1
GENERAL BUSINESS
Meeting Date: November 9, 2011

TO: Chairman and Planning Commissioners

FROM: Gary Nordquist, Assistant City Manager

SUBJECT: City Trails Program

STAFF REPORT

RECOMMENDATION:
Staff recommends that the Planning Commission recommend that the City Council adopt the following:

1) City Trails Map with Trail Names;
2) Trail Design Guidelines
3) Adopt a Trail Program; and
4) Establish Trails Commissioner role

BACKGROUND/DISCUSSION:
As part of the City's incorporation process, the City assumed the County's General Plan which included planned trails within the community. The map presented is based on this original planned trials system with a few updates. This map delineates the "open" from the "planned" trails. Additionally, this map has been enhanced with trail names as approved by the Wildomar Historical Society, the Pechanga Committee, and the Wildomar Community Council Trails Subcommittee.

Accompanying the Map are the design guidelines for trail construction. These guidelines are consistent with the County Design Guidelines.

Trails usage and special events could be coordinated by the City with the City Council appointing a Trail Commissioner to oversee the trails and Adopt-A-Trail programs.

FISCAL IMPACT:
Costs would be limited to staff time and map printing.

Submitted by:	Approved by:
_____	_____
Gary Nordquist Assistant City Manager	Frank Oviedo City Manager

ATTACHMENTS:

A) City of Wildomar- Multi-Use Trail System, adopt a Trail Map
B) Wildomar Historical Society Historic Trail Names and Pechanga Cultural Resources Letter and email
C) Adopt a Trial Program
D) Design Guidelines – Trails

Attachment A

Attachment B

City of Wlildomar Historical Society
Historical Trail Names

Specific Trails:

*Bob Buster Trail
(HT-E-07)
Our County Supervisor who encouraged and guided us to City hood.

*Cody Diep Trail
(HT-E-03)
Cody was the first child born in the new City of Wildomar on July 1, 2008.

*Ed Studor Trail
(HT-E-12)
Ed was a member of the County Transportation department. He was instrumental in establishing the first Roadside Adopt -A-Trail program. Ed was named Man of the Year 2004 by MAC. He helped the Community in obtaining traffic control in Wildomar, (Stop signs and Traffic lights) Including the traffic light in front of the library. Ed retired in 2005. (Information provided by Gary Andre, Sheryl Ade.

* Jerry Jolliffe Trail
(HT-E-08)
Jerry was instrumental in helping with and promoting the Wildomar Trail system. He was also involved in the Roundtable talks between County of Riverside and the Citizens of Wildomar to help establish a General plan for the new City of Wildomar.

* Jon Rodarme Trail
(HT-E-09)
Jon was a member of the Wildomar Incorporation Now committee. He was a stanch City -hood supporter who spoke at numerous LAFCO and Murrieta City Council meetings.

He was known for his humorous speeches against the Murrieta annexation attempt. Jon spent countless hours securing signatures for the petition drive.

*Justin T. Hunt Memorial Trail

(HT-W-23)

Justin graduated from Elsinore High School in 2000 and joined the Marines in Oct. of 2002. Justin was killed in Iraq on July 6, 2004 and he now rests in Wildomar Cemetery.

*Old Cemetery Trail

(N-S-26)

This is the site of the original Cemetery.

*1887 Overlook Trail

(HT-W-06)

This is the trail on the 1887 Promotional Map with Collier & Graham viewing Wildomar from a rock)

*Pieter van de Bovenkamp

(HT-E-01)

Member of MAC and Chamber, involved in WIN and the Farm. Killed riding a bike on Bundy Canyon.

*Whitney Water Trail

(HT-E-02)

Whitney Water—"Advertised as fresh daily since 1959"—probably the second oldest business in Wildomar.

*Wildomar Independence Trail

(HT-E-11)

To honor Cityhood on July 1, 2008 and the struggle it took reach our goal.

*1885 Wildomar Land and Water Company Trail

(HT-W-02) Established in 1886 to bring irrigation water and domestic water to the Town of Wildomar. (Along the Old Roads to the West). Remains of pipes, tools, and Machinery are still in the hills today.

*Wildon Trail

(HT-W-01)

The first name given to Wildomar by Collier and Graham. The "mar" was added in 1887.

*Veterans Memorial Trail

(HT-E-15)

To honor all the men and women who have served our country. Civil War vets include early pioneers William Collier & Abram Matthews. Later many of our boys served in WWI and WWII. Including all wars to date.

Please note: The wording of the above mentioned trail, will need some Council input, so we as a City do not offend any Veteran after the WWII era to current date.

Historic Families and People of Wildomar

*Alma Patterson Trail

(HT-E-06)

Miss Patterson, was the first school teacher when Wildomar school opened in Sept. of 1886. (Wildomar pamphlet, pg. 4)

*Alvin Jamieson Trail

(HT-E-16)

The first minister of the United Presbyterian Church in 1887. Alvin and his family are mentioned many times in the local newspapers. He moved his family to Love-land, Co. in early 1900.

*Andrew Defani Trail

(HT-W-13)

Andrew was a blacksmith as indicated on the 1887 Promotional Map. A sad story appeared in 1889 when his mother died resulting with his brother, George, committing suicide.

*Ben and Fanny Taylor Family

(HT-W-18)

Trail Ben & Fanny, Ben moved to Wildomar about 1906 as a widower with a young daughter to farm 3000 acres for William Collier. Fanny Soules came to teach school in the fall of 1906. They married in 1907 and had three children. Ben & Fanny lived the rest of their lives in Wildomar. They are buried in Wildomar Cemetery along with two of their children (Frank and Ellen Hazard) and Fanny's mother (Mary Soules).

*Brown Family Trail

(HT-W-17)

Dr. Oscar Brown brought his young family to Wildomar in 1897.

*De Jong Family Trail

(HT-E-14)

The De Jong family has been operating a diary for over 50 years. Probably the oldest operating business in Wildomar.

*Embree Family Trail

(HT-W-22)

Ezra, Ann & family-Moved to Wildomar in 1886 where Ezra and son, Albert, registered to vote on Oct. 2, 1886. Ezra opened a store in Feb. of 1887, a sketch of which appears on the 1887 Promotional Map. The store sign reads, "E. Embree & Co., Groceries & Hardware, Post office." Another son, William, was awarded the contract to build the Public Library in Oct. of 1887. Ezra lived in Wildomar for 13 years.

*Forbes-McGee Trail

(HT-W-20)

Forbes--James, Lucinda & family. The family arrived in Wildomar in 1892. James was born in Scotland and was a farmer. Son, Andrew, purchased the second cemetery lot in the new cemetery but there are no records to indicate if James' was buried there after his death on March 16, 1898. McGee-David & Lucy (Lucy was the daughter of James & Lucinda Forbes) David was a Civil War Veteran who lived in Wildomar by 1896. David served on the committee to move the cemetery and purchased lot #8. By 1900 the McGee's had moved away.

*Hampton Hirst Trail

(HT-E-05)

Isaac Hampton was an early pioneer. He moved his family from Kansas to Wildomar by the summer of 1887. Isaac was a liveryman. His second wife was Elizabeth Hirst, daughter of James and Anna. James Hirst came to Wildomar in Sept. of 1885. James was a beekeeper, real estate salesman and a school trustee. The Hirst name appears on two buildings on the 1887 Promotional Map.

*Henry Lillie Trail

(HT-E-10)

According to the Wildomar pamphlet produced by William Collier and Margaret C. Graham in 1892, page 3, "The first purchaser of land was Henry Lillie. He is also the latest buyer in this locality, having recently added twenty acres to his original purchase, paid for out of his crop of deciduous fruit that present season."

*Iva Keegan Trail

(HT-E-13)

Taught at Wildomar Elementary School for over 20 years. Kept list of teachers and other history items.

*Madison,Chaney Trail

(HT-W-21)

Madison Chaney and his wife, Jane, were miners in the area when William Collier made his first trip to the area. Madison was a very colorful character and lived in Wildomar (Chaney Hill) near the Murrieta border for many years.

*Margaret C. Graham Trail

(HT-W-19)

Margaret Graham, Collier, One of our founders and a well known author of books and magazine articles.

*Mary Simmons Trail

(HT-E-04)

Mary Simmons, Mary Simmons was the first girl born in Wildomar. She grew up to marry Dean Fletcher. Mary was born in Oct. 8, 1890 and died in 1974. She is buried in Wildomar Cemetery along with her mother and uncle, William Wilkinson, who lived to be almost 102.

*Mary Soules Trail

(HT-W-12)

Mary was the mother of Fanny Soules Taylor. Mary, a widow, followed Fanny to Ca. with her two sons from Michigan in1908. Mary lived on Central Street with her sons, Neil & Roy. For many years Mary ran a boarding house and also helped to care for the ill. Mary was known for her cooking abilities. Mary is buried in Wildomar Cemetery.

*Matthews Family Trail

(N-S-02A)

Abram & Mary, Abram served for the Union during the Civil War. Residents of Wildomar in 1888, Abram served as postmaster starting in 1902 and also for ten years as the station agent for the Santa Fe Railroad. Abram also was in charge of the cemetery for a period. There were numerous items in the local newspapers about the Matthews. Abram & Mary are buried in Evergreen Cemetery, Riverside.

*Nichols, Joseph Trail

(HT-W-15)

Joseph was the train agent who committed suicide in 1889. His grave wasn't moved to the current cemetery until 1979.

.

*Pearson Family Trail

(HT-W-16)

David and Anna moved their family to Wildomar in 1885 from Cedar County, Iowa. The family is mentioned many times in the local newspapers. One son, George (he was the second boy born in Wildomar), became the first county surveyor in 1893. By 1895 the family had moved to Los Angeles except for George. In 1900 George was living in Riverside and working as a civil engineer for the county. In 1910-30 he was living in Los Angeles County and still employed as a civil engineer. (Note: There is a notation on the 1887 Promotional Map, "Presented by Alida Pearson, Resident of Wildomar, 1886-1894. Alida was the daughter of George and Anna.)

*Torbett Family Trail

(HT-W-07)

William and family moved to Wildomar from Illinois. Early in 1894 they were growing apricots and strawberries. William passed away in 1917 and is buried in Wildomar Cemetery. His sons, Carl and Harry continued to live here as listed on the 1930 census.

*Turner Family Trail

(N-S-03)

Wyman, Elizabeth and Dave-Too many reasons to list-store, ran post office for 38 years (both Wyman & Betty were postmasters), Betty was also on the School and Cemetery

boards, the land for fire station #61 was donated by Dave Turner in memory of his father Wyman.

*Whitney Water Trail

(HT-E-02)

"Advertised as fresh daily since 1959"—probably the second oldest business in Wildomar.

*Wibel Family Trail

(N-S-02)

John, Mary, Henry-The Wibel family was living in Wildomar by 1890. Henry, the son of John & Mary, was the chairman of the committee to move the cemetery to its present location. Henry purchased lot #1 and his father, John, was most likely the first person buried at the new location. Mary was also buried there in 1912.

*Wilks Family Trail

(HT-W-14)

Richard, Fannie & family immigrated from England with four children, lived in Michigan & Kansas before coming to Wildomar by 1895. The family was mentioned often over the years in the local newspapers. Tragedy struck when one of the sons, Valentine, was killed in a hunting accident. The family had a long history of being a prominent pioneer family and son, Thomas, became known as the 'hay king" of the valley. A son of Thomas;, Arthur, was caretaker at the cemetery and took care of the trees planted in 1927 which are still standing on Palomar. All six of the original family members are buried in Wildomar Cemetery.

Historic Indian Names

*'I$wut Trail
(HT-W-03)
Means Wolf in the Luiseno language (see note below)

*Tukwut Trail
(HT-W-04)
Tukwut, means Mountain Lion in the Luiseno language (see note below)

*Qaasil Trail
(HT-W-05)
Qaasil, means White Sage in the Luiseno language (see below)

*Kukuul Trail
(HT-W-08)
Kukuul, means Burrowing Owl in the Luiseno language (see below)

*Payoomik Trail
(HT-W-09)
Payoomik, In the Luiseno language means "to the West" referring to the Juaneno. (see note below)

*Paa$uku Trail
(HT-W-10)
Paa$uku, Luiseno name for the Wildomar area meaning "the place of the Elk"; similar to the Juaneno name, Paa, Nu Ukut, meaning "the place of the springs and Dawf Bison." (see note below)

*'Ataaxum Trail
(HT-W-11)
Means The People in the Luiseno language and refers to the Luiseno (see note below)

*Luiseno language

The $ sign in the Luiseno language stands for what linguists call a "retroflex s". The sound it represents is when you curl the tip of your tongue up to the roof of your mouth and say "sh". We don't really have any sounds like that in English. The closest would be when you tell someone to be quiet "sh".

The above Luiseno names and information were supplied and approved by the Pechanga Cultural Resource Department.

Attachment C

City of Wildomar

Adopt - A - Trail Program

2011

Appendages A thru G

Roadside Adopt-A-Trail Program

Introduction

Many rural areas in the City of Wildomar have experienced growing demand for official trail designations. Development is restricting the use of areas that have traditionally functioned as Community Trails, even though these areas may have never been officially designated or dedicated for trail purposes. As new development occurs, the General Plan Trails Element is being implemented which requires the dedication and improvement of trail easements and the establishment of funding mechanisms for trail maintenance. However, in established rural communities, where new development projects are less likely to occur, the City of Wildomar is encountering increasing demand to designate trails within public road rights of ways.

While both pedestrians and equestrians can legitimately use public road rights of way, most shoulder areas have not been prepared for trail utilization and there are no existing mechanisms for trail maintenance within the public road rights of way. The City of Wildomar has been approached by some community based service organizations that would be willing to provide trail maintenance. The City feels that there are areas where official designation and joint use may be appropriate, with community support. As such, it is proposed that the City of Wildomar establish a Adopt-A-Trail Program, as outlined herein.

Adopt-A-Trail Program promotes civic pride and responsibility and provides an opportunity for individuals, organizations, and businesses to take a more active role in their community. The program allows the use of public road rights of way, as appropriate, for trail usage and provides trail maintenance within road rights of way at no additional cost to the City. City of Wildomar resources are limited to initial start up shoulder preparation, program oversight and normal ongoing routine shoulder maintenance. The Adopt-A-Trail Program results in the official designation and signage of trails in rural and urban communities and enlists the support of local community interests to provide trail maintenance.

Background

The County Regional Parks and Open Space District, faced with the same dilemma of trail demand versus funding availability, operates a similar Adopt-A Trail Program. In addition, the Transportation Department has had it's own Adopt-A-Road Program for a number of years which is geared toward litter removal and clean up of the shoulder area of County Roads. We have borrowed several elements from both programs for inclusion of the City of Wildomar Adopt-A-Trail Program, including reporting, monitoring and safety elements.

Applicability

The City of Wildomar Adopt-A-Trail Program shall apply only to locations where trails are designated on the officially adopted City of Wildomar General Plan Trails and Bikeway System. City staff shall determine the viability of a trail designation for any legible trail locations nominated for adoption. Factors to be considered in such review shall include: width of shoulder, obstructions such as utilities, street trees and encroachments, width of drainage/bridge structures, condition of the shoulder area (i.e. slopes, drainage, soil/rocks, etc.), traffic volumes, and safety factors. Upon determination that a trail qualifies for the Adopt-A-Trail Program, City staff will work with the Trail committee to identify the scope of maintenance to be performed.

Scope of Activities

The City of Wildomar Adopt-A-Trail Program is intended to provide trail maintenance and litter removal for designated trails located within public road rights way adjacent to City Maintained roadways. Participants in the program agree to remove litter, including horse droppings, at least four times per year and provide maintenance at least once per year for a four-year period on a particular trail segment. Specific requirements may vary depending upon the trail location. Maintenance will include, but is not limited to: cutting back vegetation, weed removal, filling small holes, disposal of horse droppings, removal of fallen trees, and trimming overhanging branches. City staff will determine the appropriate scope of maintenance in cooperation with the trail sponsor.

Upon issuance of a Adopt-A-Trail Permit, the City will perform an initial clean up and dress up the shoulder area to be designated for trail utilization and install appropriate trail markers, in coordination with the Trail Committee. At such time, the Cites Public Works Department, staff will identify any specific maintenance concerns or issues.

Permit Procedures

A no fee standard encroachment permit would be executed by those interested in the program allowing access to the public right-of-way. It will be a four-year non-transferable permit. In addition, a hold harmless agreement must be executed by the permittee. The permittee will then perform trail maintenance with its own people, through a hired contractor, or may financially sponsor a work crew.

Safety

The City will review the adopt-ability of each location to minimize risk. Areas will not be able to be adopted if any of the following is present:

Work area is unsafe without traffic control.

Roadside so narrow that participants would be required to work within the

Roadway.

Visibility is too restricted.

High speed traffic is too heavy or too close.

Terrain is too rugged or too steep.

Vegetation too dense.

Site conditions are unsuitable for volunteer work crew?.

Trail maintenance and litter pickup are allowed only in the unpaved shoulder area and are not allowed upon bridges, culverts, or structures of any kind. Work is limited to daylight hours and cannot be conducted on holiday weekends or within twenty-four hours preceding a holiday weekend.

In addition to the above in the event that weather or other adverse circumstances arise that constitute a hazard to the workers, the work shall be immediately discontinued.

Finally, if the workers are minors, there must be one adult supervisor per five minors. No one under the age of 14 will be allowed to be a participant. Minors must have a permission slip waiving liability signed by their parent or legal guardian.

Program Guidelines and Orientation

Prior to any work being conducted, it is the responsibility for the permit sponsor to discuss and review the Cities safety rules as well as permit conditions with the volunteers.

Each participant shall attend a safety orientation, based on City-provided handouts, conducted by the permittee spokesperson prior to entering the right-of-way. The orientation shall consist of discussion and explanation of the safety requirements. Individuals must participate in a permittee sponsored safety orientation at lease once during each calendar year during which work is authorized.

Cities Commitment

The City will provide up to twenty (20) mesh vests per each location as well as trash bags. Additional bags will be available from the coordinator.

The City will also provide a sign on each end of the travelway identifying the location as a Adopt-A-Trail facility and the group/organization/or individual responsible for the trail maintenance and litter pick up, thus providing community recognition for those groups which participate.
The City will develop a handout for the Trail Committee which details safety rules and conduct

a Trainer program to go over the program details. In addition, the City will provide permit conditions, tips for working outdoors, and pick up and disposal of trash bags after an area has been cleaned, provided the clean up frequency is no more than once a calendar quarter. The City would consider a frequency less than once a quarter on a case by case basis.

Permittee's Commitment

The permittee is responsible for trail maintenance and litter pick up for (4) four years. The permittee is responsible to maintain at the very minimum a 1/4 mile stretch of City-maintained roadside. (See Adopt-A-Trail Map for selection of trails) In addition, the permittee is responsible for insuring its group? compliance with all safety and permit requirements as well as periodically reviewing said requirements with participants.

Liability/Exposure

The permittee shall execute a hold harmless agreement. The agreement will indemnify and hold harmless the City from any and all claims, demands, actions or liabilities or loss. The permittee is also required to obtain a no-fee encroachment permit.

Summary

The Adopt-A-Trail program provides a valuable service to the community, while encouraging individuals and groups to be more involved in their local community.

The program augments the existing trail system and provides a mechanism for trail maintenance within public road rights of way. Thus such joint use can be accommodated, while allowing the City Public Works to concentrate its primary responsibilities of road safety and roadway maintenance.
The program increases the level of shoulder maintenance and litter removal, improving the aesthetics of the City at a minimum cost and creates a partnership between the community and the City of Wildomar.

Getting Started

If you are interested in participating in the program, please contact the City of Wildomar at (951) 677-7751. We would be pleased to send you additional information and the necessary forms.

City of Wildomar

Adopt - A - Trail Program

APPENDIX A

GENERAL INFORMATION

ADOPT-A-TRAIL PROGRAM:

Is fun, educational and worthwhile.

Provides for community trails.

Promotes civic responsibility.

Saves taxpayer dollars.

Lets you help cleanup and beautify City roads in an area mutually agreed to by your organization and City.

Provides you, your organization or company prominent recognition.

OPPORTUNITIES FOR:

Individuals

Organizations

Businesses

PARTICIPATE BY:

Performing trail maintenance and litter removal.

Or financially sponsoring special programs.

High school work programs.

Traffic ticket work to pay program.

(Inmate/probationer) litter crew.

IT'S YOUR CHOICE:

Do the work with your own people.

Hire a contractor.

Sponsor financially.

YOUR REWARDS:

Satisfaction

Public recognition

Civic pride

YOUR COMMITMENT:

Provide trail maintenance and litter removal for four years on a minimum of a 1/4 mile stretch of City-maintained roadside or Flood Control Access Roads.

Follow all safety and permit requirements.

OUR COMMITMENT:

We loan you up to a maximum of 20 orange vests.

We issue the permit at no charge.

We pay for and install recognition sign(s).

We provide trash bags.

We will pick up trash bags provided the cleanup frequency is not more than once a quarter.

We will provide advanced warning signs and other necessary traffic control devices.

RECOGNITION SIGNS:

Are placed at the beginning of your litter project in each direction of traffic.

May vary in size according to the local situation.

The decision to place signs, their size, and location are at the sole discretion of the City of Wildomar.

Recognition on the sign is limited to your name and logo or insignia - no products may be identified.

HOW TO GET STARTED:

Select the location you want, and then contact the:
City of Wildomar Public Works Department at (951) 677-7751.

Discuss the Trail location and project with the City.

If your area is available and safe for adoption, apply for a free permit.

Allow about 2 months for sign placement.

Notify City before each work event.

Review and follow safety requirements.

Perform the work satisfactorily.

AREAS MAY NOT BE ADOPTABLE BY VOLUNTEERS IF:

They are already adopted

Access to work areas is unsafe.

The work area is unsafe without traffic control.

The shoulders or roadside are so narrow that participants would be required to work within roadway.

Visibility is too restricted.

Construction or other work is underway or planned.

Traffic is too heavy or too close and fast moving.

Vehicle road runoff potential is too high.

Terrain is too rugged or too steep.

Brush or vegetation is too dense.

Site conditions are unsuitable for your groups age level or experience.

PERMIT RENEWALS:

Renew your Adopt A Trail permit as many times as you want.

You cannot transfer your permit to others.

SAFETY:

The program depends on the common sense and responsibility of individual Participants.

Participants must realize they are working in a potentially hazardous environment and diligently follow all safety requirements.

Selection of adoptable locations minimizes risk.

YOUR PERMIT:

Read, understand and conform to the provisions in your permit.

Provide a copy of the safety requirements to each participant.

Conduct an initial safety meeting and discussion before you begin your project and least once a year.

Review safety requirements with your group each time before going out.

Each work group must have a copy of the permit and safety requirements with them on the roadside.

Participants hold the City harmless for death, injury or property damage.

SAFETY GEAR AND CLOTHING:

Participants should understand the importance of and insure that sufficient drinking water is available.

Wear orange vests whenever you are out on the roadside-put them on ahead of time.

Wear long pants and sturdy shoes or boots.

Light-colored clothing, long-sleeve shirts and sunscreen are suggested.

ACCESS AND PARKING:

Vehicles used to transport workers; equipment or materials to work areas may be parked on the right-of-way if they are parked completely off the pavement, at least six feet from the traffic lane. Consolidate people to minimize vehicles.

Never park on a bridge or any other structures.

Do not park in grassy areas where your vehicles exhaust system could start a fire or in muddy areas where vehicles could become stuck.

Do not use your emergency flashers when parked.

If you are working some distance from your car, display your permit or a note indicating Adopt-A-Trail Crew at Work on your vehicles windshield for Highway Patrol identification.

Improperly parked vehicles may be ticketed or towed by the Highway Patrol.

When you leave a work site in your vehicle, use your signals, consider the speed of traffic, wait for an adequate gap in traffic and pull onto the pavement carefully, once on the pavement, accelerate swiftly and smoothly.

WHEN ON FOOT:

]

Exit and enter your vehicle on the side away from traffic whenever possible.

Walk and work facing oncoming traffic whenever possible - be alert and keep an eye on traffic.

Do not walk on the roadway, shoulders or bridges.

Never work in the median.

Use caution when crossing roads.

WORK HABITS:

Do not work on holiday weekends or 24 hours before holiday weekends.

Do not work when it is raining or foggy or when the road is wet or icy.

Discontinue your work at least one hour before sunset.

Do not touch potentially hazardous materials such as powders, chemicals, weapons, sharp objects or dead animals.

Avoid over-exertion and drink plenty of water.

Do not consume alcoholic beverages or drugs before entering, or while on the Right-of-way.

City of Wildomar

Adopt - A - Trail Program

APPENDIX B

PERMIT CONDITIONS

Permittee is authorized to enter City right-of-way at least four (4) times per year for the purpose of trail maintenance and litter removal.

Permittee shall notify City, five (5) working days prior to start of any work. Litter-bags and vests may be obtained by contacting Cities representative.

Work may only be conducted between a half hour after sunrise and a half hour before sunset daily.

Work shall not be conducted on holiday weekends, or within twenty-four (24) hours preceding a holiday weekend unless specifically authorized.

Courtesy signs indicating organization's name will be furnished, installed and maintained by City for the term of this permit, in advance of the work area.

Litter pick up shall not be performed within six (6) feet of the traveled way, within center dividing medians, upon bridges, culverts, or structures of any kind.

Traffic control is prohibited by this permit except for shoulder closure, which may be authorized by City Representative.

Permittee's work shall be subordinate to operations, which City may conduct and shall not interfere with City work.

If weather or other adverse circumstances cause a public hazard, work shall be immediately discontinued.

Personnel performing work under this permit shall wear safety vests, while on City road Right-of-Way.

Work shall not be initiated prior to briefing on safety procedures by City Representative.

Permittee shall designate a spokesperson that shall represent the group. In addition, one (1) adult supervisor shall be assigned for each five (5) minors. No minor less than 14 years of age shall be allowed to participate.

Participant's personal vehicles shall be legally located off the traveled way so as not to interfere with the free flow of traffic or pedestrians and obey all parking regulations.

Permit is valid for two (4) calendar years from date of issue and may be renewed upon receipt

of an appropriate application.

It is understood and agreed by the permittee that the doing of any work under a permit shall constitute an acceptance of the provisions of the permit and all attachments.
The Encroachment Permit or a copy thereof shall be kept at the site of the work and must be shown to any representative of the City or any law enforcement officer on demand.
WORK SHALL BE SUSPENDED IF PERMIT IS NOT AT JOB SITE AS PROVIDED.

Each individual shall attend a safety orientation conducted by the permittee prior to entering the right-of-way. The orientation shall include a discussion and explanation of the safety requirements. Each attendee shall sign and date a safety requirements training verification sheet (See Appendix E).

Individuals must participate in a permittee sponsored safety orientation at least once during each calendar year when work is authorized.
The City of Wildomar and its officers and employees shall not be liable for any death, injury or property damage claim which arises from any cause related to this program. If any claim arises out of the foregoing, the permittee shall defend, indemnify and hold harmless the City of Wildomar and its officers and employees from same. Permittee shall enter into a Hold Harmless Agreement.

The permit may be canceled by City for non-conformance with any permit conditions or failure to adhere to direction given by City Representative.

City of Wildomar

Adopt - A - Trail Program

APPENDIX C

PERMIT APPLICATION

Tracking #_____
Date:_____

Application For Encroachment Permit

The undersigned hereby applies for a permit to excavate, construct and otherwise encroach on City of Wildomar Road right of Way or Flood Control Access road as follows:

Description of work and installation to be maintained. Attach and refer to map or other documents.

_____

_____

_____

Name and trail number and specific location:

_____

Applicant will state accurately, the location of work to be performed, giving Trail Number and street name:

_____

_____

In consideration of Granting of this Application, the applicant agrees to:

1. Indemnify, defend and save the city , it's authorized agents officers, representatives and employees, harmless from and against any and all penalties, liabilities or loss resulting from claims or court action arising out of any accident, loss or damage to persons of property happening or occurring as approximate result of any work undertaken under the permit granted pursuant to this application.

2. Remove or relocate an encroachment installed or maintained under this permit. Upon written notice from the City of Wildomar.

3.Notify the City at least 48 hours in advance of the time when work will be started and on completion of the work. Immediately notify the City of such completion in righting

4. Comply with all City ordinances and amendments thereto, and all terms and conditions of the permit. All applicable rules and regulations of the City of Wildomar and other public agencies having jurisdiction.

5.The permittee shall except full responsibility for complying with Federal, State and City environmental laws. Receiving any necessary environmental clearances and/or permits prior to commencing any work as authorized by this permit.

Name of Applicant:_____

Authorized Signature:_____

Mailing Address:_____

Contact:_____

Phone:_____ Email:_____

City of Wildomar

Adopt - A - Trail Program

APPENDIX D

HOLD HARMLESS AGREEMENT

City of Wildomar

Adopt - A - Trail Program

HOLD HARMLESS AGREEMENT

This agreement is entered into as of this _____ day of _____, 20_____
By and between the City of Wildomar, California (hereinafter City and

_____ (Hereinafter Permittee)_____

RECITALS

WHEREAS, in order to promote civic responsibility and community pride, the of Wildomar has established a Adopt-A-Trail program to allow the use of public road rights of way for trail usage and provide for trail maintenance and litter removal along some City roads; and Flood Control Access Roads.

WHEREAS, Permittee wishes to adopt a trail through the Adopt-A-Trail Program, which procedures include the execution of a hold harmless agreement;

NOW, THEREFORE, the parties agree as follows:
1.
2.1. Permittee will comply with all conditions for the of Wildomar Adopt-A-Trail Program Permit as set forth in Exhibit A, and incorporated herein by reference.

2. Permittee agrees to indemnify and hold harmless the City of Wildomar from any and all claims, demands, actions, liabilities or loss which may arise from or as the result of death, injury or damage to persons employed by volunteering or acting on behalf of the Permittee. If any claim arises out of the foregoing, the Permittee shall defend, indemnify and save harmless the City, its officers, agents, and employees from any and all demands, claims, liabilities or other expenses of any nature whatsoever arising directly or indirectly form the issuance of the Permit.

Permittee_____ Print Date: _____, 20_____

Permittee_____ Signature Date: _____, 20_____

City of Wildomar

ADOPT-A-TRAIL PROGRAM

APPENDIX E

PERMISSION SLIP FOR MINORS

Minors participating in the Adopt-A-Trail Program must be at least 14 years of age. It is the permitee? responsibility to provide at least one adult supervisor for every five minors. Minors must be closely supervised at all times while working in road rights of way and must undergo the safety orientation as all other participants.

_____ has my permission to participate in the
(Minor's Name)

Adopt-A-Trail Program. I understand that it is my responsibility to provide adequate insurance coverage for my child. I further release City of Wildomar and its employees, representatives and agents from liability and agree to hold them harmless for any death or injury which may do to participation in the activities associated with the Adopt-A-Trail Program.

_____	_____	_____
(Parent or Legal Guardian) (Please Print)	(Signature)	(Date)

EMERGENCY INFORMATION

In case of an emergency contact:_____

Daytime Phone Number: _____

City of Wildomar

Adopt - A - Trail Program

APPENDIX F

TRAIL WORK REPORTING FORM

WORK PROJECT CONTACTS_____

GROUP, CLUB or INDIVIDUAL:
_____

GROUP LEADER:_____

ADDRESS: _____

PHONE:_____

TRAIL NAME/LOCATION:_____

Instructions: *Fill in date. Describe the work accomplished. Record the total number of people participating. Record the hours per day (including meetings with managing agency, safety briefing, travel time to and from the project, and hours worked). Multiply People by hours to get Total Hours. Add daily totals to Total Hours for multi day projects.*

Work Record

BRIEFING_____
_____
_____
_____

SAFETY TALK_____
_____
_____
_____
_____

EQUIPMENT CHECK_____

FIRST AID KIT _____

WATER _____

TRAIL MAINTENANCE SAFETY

Thank you for volunteering.
For your safety and that of others, please follow these safety rules.
Always wear safety vests. Face oncoming traffic and keep an eye on traffic.

Insure that a first aid kit is available and appropriately stocked.
Maintain at least 8-10 feet between you and other workers, both when working and when walking along the trail.

Do not carry tools on your shoulder. Carry at your side, on the downhill side of the trail. If you stumble, drop the tool safely away from yourself.
When using tooling, check around for clearance. Avoid swing tools overhead.
Make sure tools are in good working order prior to the start of the project. Do not use tools that have defects in the handles, do not operate properly, or show signs of any potential safety problems.

When using a tool, insure that you have a firm grip on the tool. Assume a balanced and comfortable stance.

Always make sure that you have a good grip on your tool. Gloves that are wet or muddy can lead to slippage.

When tools are not in use, place them away from the roadway with handles pointed toward the trail.

When passing other workers on the trail, announce that you are coming through. Wait for them to acknowledge and stop work before you pass.

Make sure when cutting overhead branches or moving rocks, make sure that they will not fall and hit someone or land in the adjacent roadway.

When lifting heavy objects, ask for assistance. Don't try to prove yourself.
Be aware of your surroundings in the work area. Identify areas that have poor footing, overhanging vegetation, lose rock, etc. Insure that the work area is safe.

Advise others of any hazards encountered, such as loose footing, poison oaks, snakes, bees or ticks.

Always use appropriate safety gear. Eye protection is required when operating power equipment or when flying debris is present.

Take regular breaks to avoid overheating and exhaustion. Sit down, drink plenty of water, and find some shade. Stow tools safely away from the trail and roadside when not in use.
Stop work at least one hour before sunset.

City of Wildomar

Adopt - A - Trail Program

APPENDIX G

SAFETY REQUIREMENTS FOR PARTICIPANTS

City of Wildomar

Adopt - A - Trail Program

Safety Requirements for Participants

This program depends upon the common sense and responsibility of participants. Participants must realize that they are working in a potentially hazardous environment and must diligently follow all safety requirements. While on the trails, remember: **SAFETY FIRST!!!**

Protect yourself and others:

When working on roadside trails, face oncoming traffic as you work and keep an eye on traffic. Be prepared to move quickly, if necessary. Stay off of the roadway itself.

Cease work at least one hour before sunset.

Do not attempt to remove materials that you suspect may be toxic or hazardous. Items to avoid include: powders, chemicals, smelly substances, suspicious packages, chemical drums or containers, weapons, syringes or hypodermic needles, and dead animals. Notify the City of Wildomar's Public Works Department coordinator or the Sheriff of the location weapons or suspected toxic substances.

Do not attempt to compact trash bags. Injuries from broken or jagged objects may occur.

Always wear City provided safety vests while on roadside trails.

When working on roadside trails, do not run, throw objects or engage in horseplay or other activities that maybe a distraction to drivers.

Wear long pants and heavy leather boots with ankle support. Light-colored clothing, long sleeve shirts, gloves, hats and sunscreen lotion are recommended.
Avoid overexertion. Drink plenty of water, especially on warm humid days.

Do not consume alcoholic beverages or drugs before entering, or while on the trail.

Watch your footing and stay off of steep slopes, drainage's facilities or other places from which you might fall.

Be alert for places where snakes may be found. Also be alert for stinging insects and poisonous plants, i.e. poison oak, etc.

Always follow safety instructions on any power tools such as weed eaters, chainsaws, etc.

Always be aware of your surroundings, particularly the location of other crew members when operating any tools or swinging hand tools such as axes, hoes and picks.

A First Aid kit <u>must</u> accompany all work crews.
The first aid shall include the following items:

Band aids

Gauze pads

Tape Ammonia inhalant

Large wrap bandage

Scissors

Tweezers

Antiseptic cream or spray

Wire cutters or pliers

Flashlight with fresh batteries

Emergency thermal blanket

Always dispose of trash bags properly.

Take out whatever you bring in.

I _____ have read and understand the foregoing safety
(Print Name)
requirements and have attended a safety orientation this date. I hereby accept the responsibilities of this permit and agree to save harmless the City of Wildomar, its officers, agents and employees from any and all demands claims, liabilities or other expenses of any nature.

_____ _____
(Signature) (Date)

Attachment D

From: Matthew Bassi
Sent: Wednesday, August 10, 2011 1:19 PM
To: garyandre@verizon.net
Subject: FW: trail fencing

Gary,

Got your voice mail message. Below is what I sent to you on August 3. I believe this should suffice

MATT

Matthew C. Bassi

Planning Director

City of Wildomar

23873 Clinton Keith Road, St. 201

Wildomar, CA 92595

Office: 951-677-7751

City Hall Hours: M - Th (8 - 5 pm)

City Hall is closed every Friday

From: Matthew Bassi
Sent: Wednesday, August 03, 2011 2:17 PM
To: 'garyandre@verizon.net'

Subject: trail fencing

Gary,

I received your message and here is my reply. The fencing material that I have in my office for our trails is a high quality fencing that is most definitely durable and nice looking. The specs are pretty simple as follows: the poles should be .135 in thickness and "mono-extruded" plastic/molding. The rails should be ..105 in thickness and "mono-extruded" plastic/molding. The fencing should be white in color to match our existing trail fencing. Hope this helps. Let me know if you have any other questions.

MATT

Matthew C. Bassi

Planning Director

City of Wildomar

23873 Clinton Keith Road, St. 201

Wildomar, CA 92595

Office: 951-677-7751

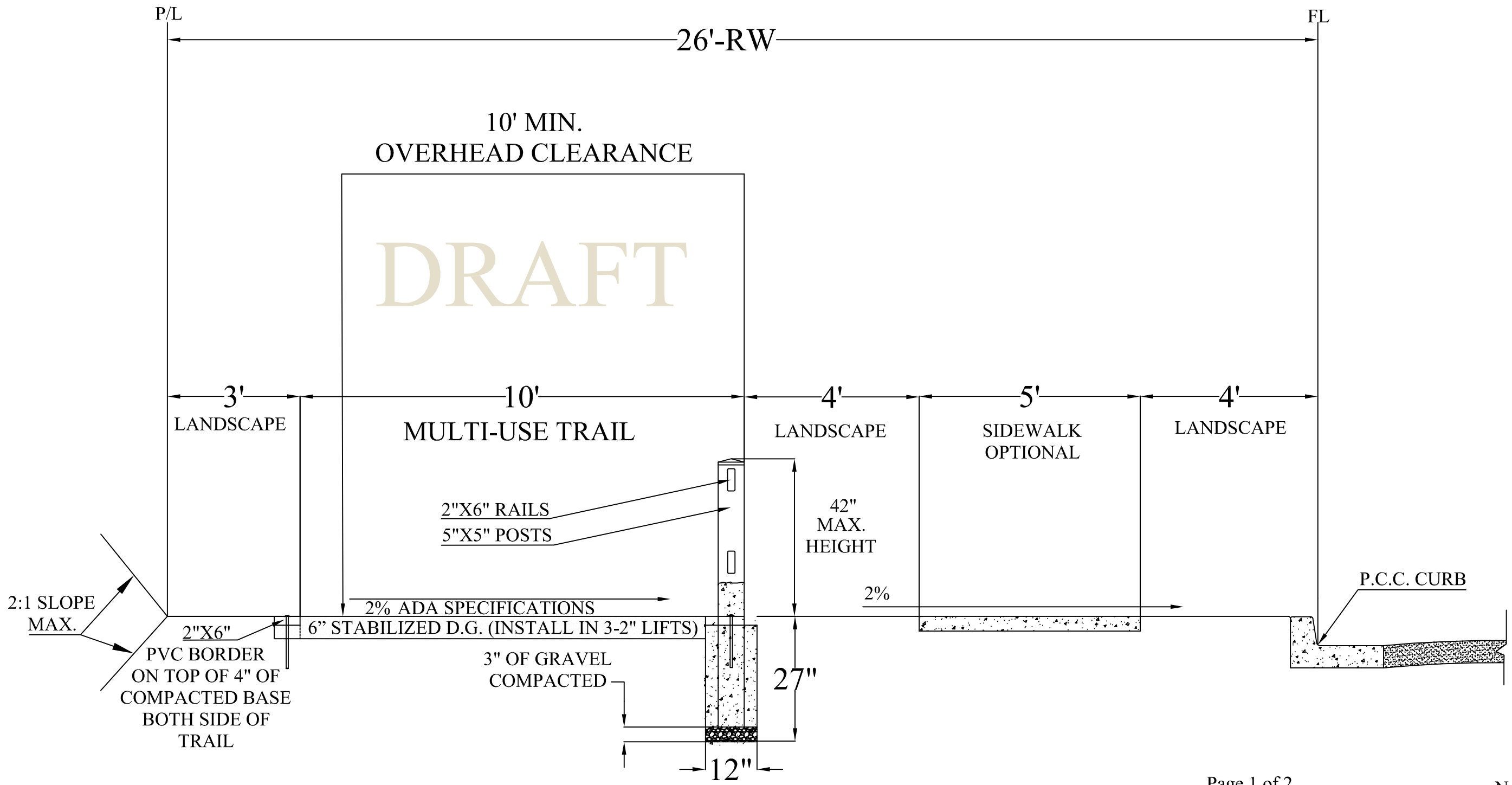

Page 1 of 2

Not To Scale

NOTE: 1. OMIT FENCE WITHIN: SIGHT DISTANCE RESTRICTED USE AREAS.

City of Wildomar

Office: 951-677-7751 Fax: 951-698-1463

www.cityofwildomar.org

APPROVED BY:	CITY PLANNING DIRECTOR:	DATE:

REVISIONS:		BY:	APPROVED	DATE	REVISIONS:		BY:	APPROVED	DATE

REGIONAL/COMMUNITY MULTI-USE TRAIL PLANS
40" HIGH 2 RAIL VIRGIN PVC, MONO EXTRUDED FENCING. POSTS ARE SET TO A MAXIMUM HEIGHT OF 42"
6" STABILIZED D.G. TRAIL.INSTALLED IN THREE 2" COMPACTED AND ROLLED LIFTS.
SEE ATTACHED SPECIFICATIONS SHEET.

STANDARD NO. _____

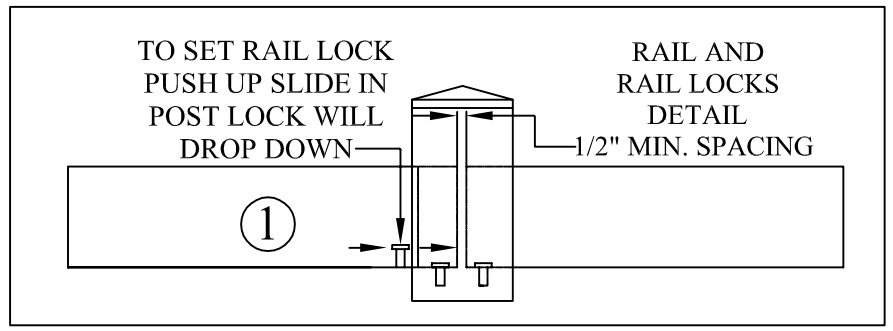

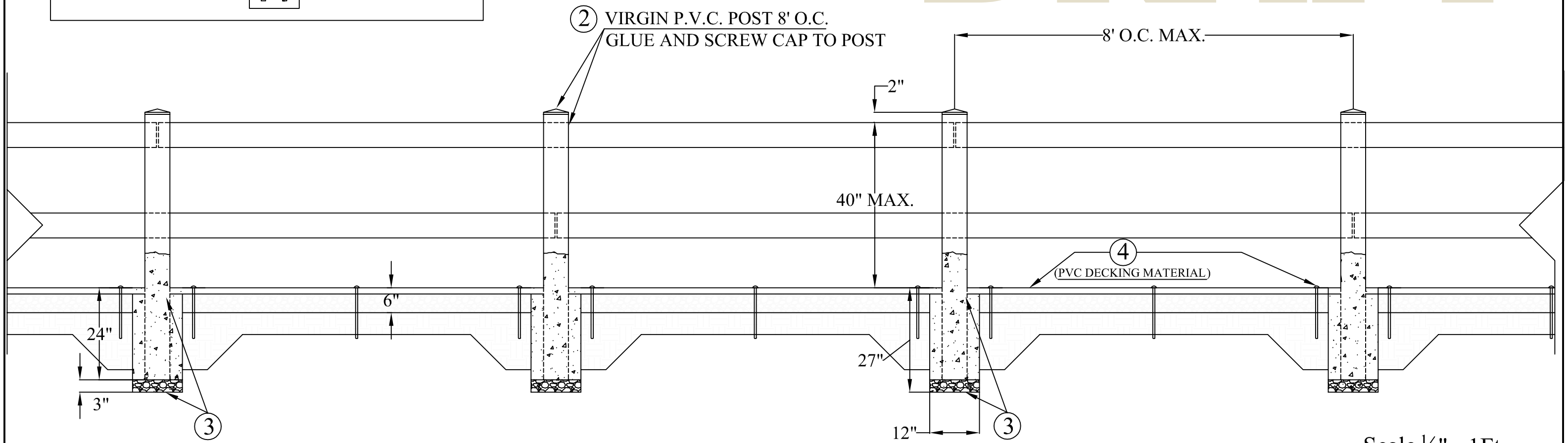

DRAFT

City of Wildomar

Office: 951-677-7751 Fax: 951-698-1463

MULTI-USE COMMUNITY TRAIL PLANS

APPROVED BY:

REVISIONS:	BY:	APPROVED	DATE

NOTES:

LEGEND:

1.) 2-RAIL, PVC SPLIT RAIL FENCE 40" TO 42" HIGH ABOVE FINISH GRADE (MAXUMUM)
2.) POLYVINYL CHLORIDE (PVC) POST AND FENCE MATERIAL SHALL BE (LEAD FREE)
3.) POLYVINYL CHLORIDE (PVC) POST AND FENCE MATERIAL SHALL BE (MONO-EXTRUDED.)
4.) POLYVINYL CHLORIDE (PVC) POST AND FENCE MATERIAL SHALL BE (SOLID WALL CONSTRUCTION AND (UV) PROTECTED)
5.) THE MINIMUM POST SIZE IS 5"X5"INCHES WITH A MINIMUM WALL THICKNESS OF 0.135 INCH)
6.) THE RIBBED RAILING SIZE IS 2"X6"X16" (EXACT) WITH A MINIMUM WALL THICKNESS OF 0.105 INCH)
7.) RAILS SHALL BE SECURED INTO 5"X5" POSTS WITH RAIL LOCKS AT EACH END) SEE ATTACHMENT 1
8.) POST CAPS SHALL BE EXTERNAL MOUNT, 5"X5"INCHES SQUARE, (INSIDE DIA.) ATTACH WITH WHITE VINYL ADHESIVE MELT GLUE. ATTACH ONE: WHITE COLORED STAINLESS STEEL SCREW ONTO TRAIL FACING SIDE ONLY. SEE ATTACHMENT 2
9.) POSTS SHALL BE SET A MINIMUM 24" DEEP, WITH A MINIMUM FOOTING OF 12" DIA. X 27" DEEP, FILL FOOTING WITH WET CONCRETE, PLACEMENT OF A 3" OF COMPACTED GRAVEL AT THE BOTTOM OF FOOTING. THIS IS DONE TO CORRECTLY ADJUST TOP ELEVATION OF POSTS. PREVENTS SLIPAGE OF POSTS AFTER INSTALLATION. FILL WITH WET CONCRETE) SEE ATTACHMENT 3
10.) FENCE POSTS TO BE SET AT 8' O.C. BY A QUALIFIED LICENCED FENCING CONTRACTOR)
11.) FINISH GRADE SHALL MEET ADA REQUIREMENTS {2% GRADIENT MAX.} 6"X2" X 16" 100% VIRGIN PVC FENCING MATERIAL INSTALLED, ON TOP OF 4" OF COMPACTED BASE, USE ½ "X 12" GALVANIZED CARRIAGE BOLTS 3'-6" O.C. (TO SECURE 2"X6" FENCE RAILING TO GROUND) SEE ATTACHMENT 4 INSTALL ON EACH SIDE OF TRAIL)
12.) END POSTS SHALL HAVE OPEN SLOTS ONLY TO RECEIVE RAILS! NO SLOTS SHALL BE ON OTHER 3 SIDES OF POST (UNLESS NEEDED)
13.) SOLID GROUT WITH WET CONCRETE' 5"X5" POSTS 12" ABOVE FINAL GRADE, OR 2" BELOW THE LOWER RAIL SLOT)
14.) STAGGER JOINTS OF UPPER AND LOWER RAILS @ ALTERNATE POST LOCATIONS. LEAVING ½" EXPANSION JOINT BETWEEN RAIL ENDS
15.) STABILIZED DECOMPOSED GRANITE: (THREE - 2" COMPACTED LIFTS, MINIMUM STABILIZER THIKNESS IS 6") (SEE ATTACHED MANUFACTURER SPECIFICATIONS AND DIRECTIONS)
16.) FENCE COLOR WILL BE WHITE UNLESS OTHERWISE NOTED BY PLANNING DIRECTOR. (SIGNATURE REQUIRED:_____
17.) ALL MATERIALS SHALL MEET THE "BUY AMERICAN" PROVISION ACT)

CITY OF WILDOMAR TRAIL PLAN
26' FT. EASEMENT, NO SIDEWALK

DRAFT

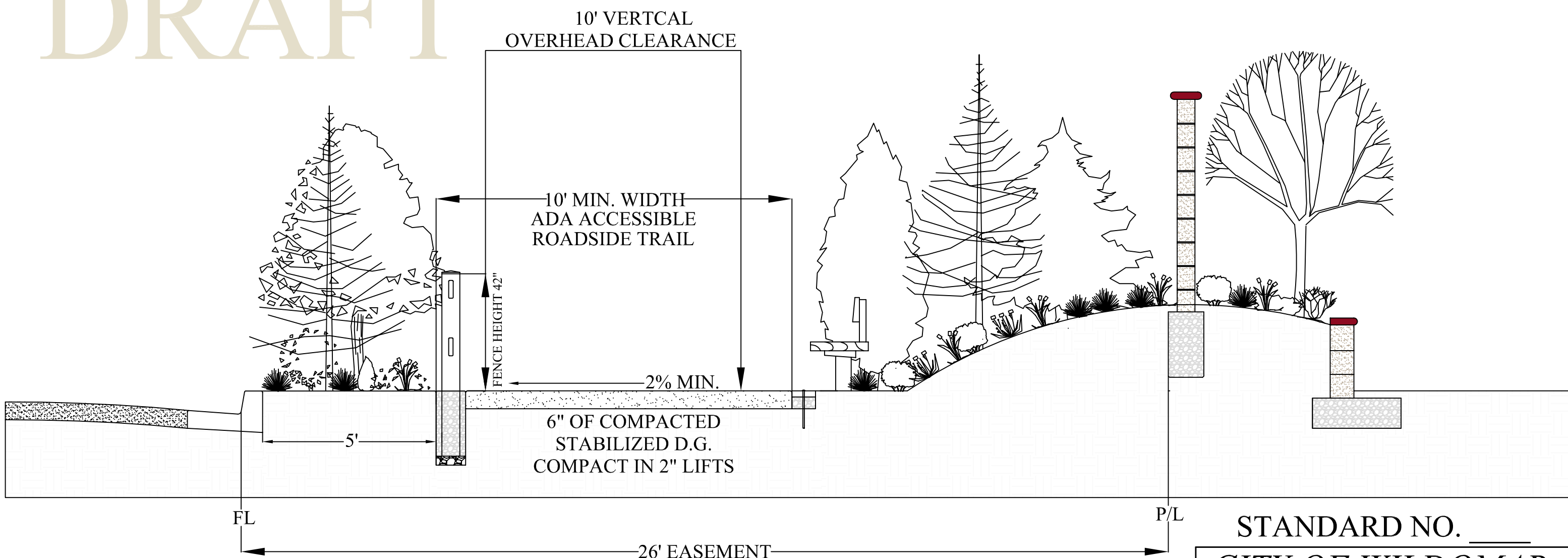

STANDARD NO. ____

CITY OF WILDOMAR

OFFICE: 951-677-7751 FAX: 951-698-1463
WWW.CITY OF WILDOMAR.ORG

MULTI-USE COMMUNITY TRAIL PLANS
42" HIGH MAX. 2 RAIL VIRGIN PVC
EXTRUDED FENCING.
6" STABILIZED D.G. TRAIL.
SEE ATTACHED SPECIFICATIONS SHEET

APPROVED BY:	DIRECTOR OF PLANNING:	DATE:

REVISIONS:	BY:	APPROVED	DATE	REVISIONS:	BY:	APPROVED	DATE
	1.				5.		07-09-10
	2.				6.		
	3.				7.		
					8.		

DRAFT

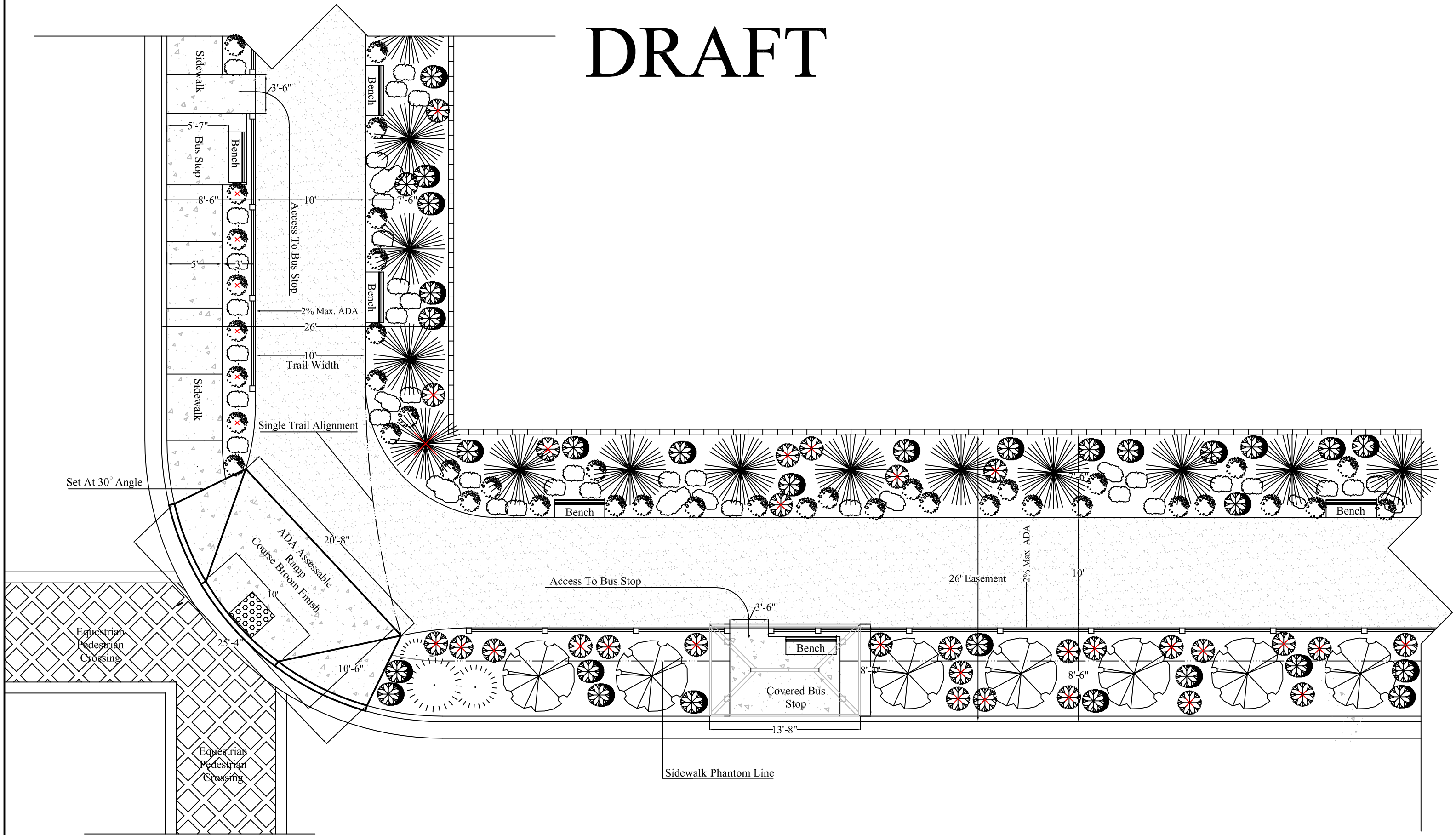

DRAWN BY: GARY ANDRE
12-10-2010