PLOT PLAN NO. 13-0082

CITY OF WILDOMAR, CALIFORNIA

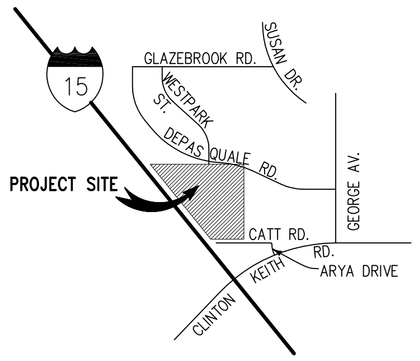

VICINITY MAP
NOT TO SCALE
SEC. 36, T.6S, R.4W

DEVELOPER/APPLICANT

GOLDEN EAGLE MULTI-FAMILY PROPERTIES, LLC
6201 OAK CANYON, SUITE 200
IRVINE, CA. 92618
(949) 270-7800

ENGINEER:

PACIFIC COAST LAND CONSULTANTS, INC.
25096 JEFFERSON AVENUE, SUITE "D"
MURRIETA, CA. 92562
TELEPHONE NO.: (951) 698-1350
FAX NO.: (951) 698-8657
CONTACT: JEI KIM

ASSESSOR PARCEL NUMBER

376-410-013; 376-410-023 & 376-410-025

UTILITY PURVEYORS:

SCHOOL	ELSINORE VALLEY UNIFIED SCHOOL DISTRICT
SEWER	ELSINORE VALLEY MUNICIPAL WATER DISTRICT
WATER	ELSINORE VALLEY MUNICIPAL WATER DISTRICT
GAS	SOUTHERN CALIFORNIA GAS COMPANY
TELEPHONE	VERIZON/TIME WARNER
ELECTRIC	SOUTHERN CALIFORNIA EDISON COMPANY
CABLE TV	VERIZON/TIME WARNER

GENERAL NOTES:

1. PREPARED ..... : JANUARY 2016
2. THOMAS BROS. ..... : 2006, PG. 897, F7
3. EXISTING ZONING ..... : SCENIC HIGHWAY COMMERCIAL (CPS)
4. PROPOSED ZONING ..... : GENERAL RESIDENTIAL (R-3) & SCENIC HIGHWAY COMMERCIAL (CPS)
5. EXISTING LAND USE ..... : COMMERCIAL OFFICE (CO)
6. PROPOSED LAND USE ..... : VERY HIGH DENSITY RESIDENTIAL (VHDR) & COMMERCIAL RETAIL (CR)
7. PROJECT ACREAGE ..... : 27.6± AC GROSS
8. F.E.M.A PANEL NO. ..... : 2705G (ZONE X)
9. TENTATIVE MAP INCLUDES THE ENTIRE CONTIGUOUS OWNERSHIP OF THE LAND DIVIDER.

PROJECT INFORMATION:

	POD-1/PARCEL 1	POD-2/PARCEL 2	POD-3/PARCEL 3
OCCUPANCY:	A2, B & M	R2	R2
TYPE OF CONSTRUCTION:	V	V	V
INDIVIDUAL UNITS:	2 RESTAURANT (16,000 SF)	124 UNITS	67 UNITS
	RETAIL (17,354 SF)		
	MAJOR RETAIL (85,000 SF)		

TOTAL BUILDING SQ. FT.

POD-1/PARCEL 1	POD-2/PARCEL 2	POD-3/PARCEL 3
118,354 S.F.	246,547 S.F.	113,384 S.F.

AREA DENSITY CALCULATIONS

COMMON AREA	POD-1/PARCEL 1		POD-2/PARCEL 2		POD-3/PARCEL 3	
TOTAL BLDG. FOOTPRINT LEVEL 1	118,354 SF	21.0%	84,256 SF	23.3%	47,812 SF	30.2%
LANDSCAPING	82,885 SF	14.7%	113,808 SF	31.5%	42,690 SF	26.9%
SIDEWALKS/PARKING/ALLEY	361,556 SF	64.3%	163,484 SF	44.31%	68,056 SF	42.7%
CLUBHOUSE & LOGGIAS	–	–	2,568 SF	0.71%	–	–
TRELLIS – 324 S.F. EACH	–	–	648 SF	0.18%	324 SF	0.20%
SUB-TOTAL AREA	562,795 SF	100.0%	361,548 SF	100.0%	158,558 SF	100.0%
WESTPARK ST. & COPPER CT.	119,355 SF					
GRAND-TOTAL AREA	27.6±AC. = 1,202,256 SF.					

PARKING

	POD-1/PARCEL 1	POD-2/PARCEL 2	POD-3/PARCEL 3
REQUIRED	756	322	161
PROVIDED	797	322	165
ENCLOSED RESIDENTS ONLY	0	248	134
GUESTS/PUBLIC	714	66	27
CLEAN AIR	61	2	2
ADA	16 (14 REQ)	6 (4 REQ)	2 (1 REQ)
LOADING ZONE	6	0	0
GRAND TOTAL PARKING	797	322	165

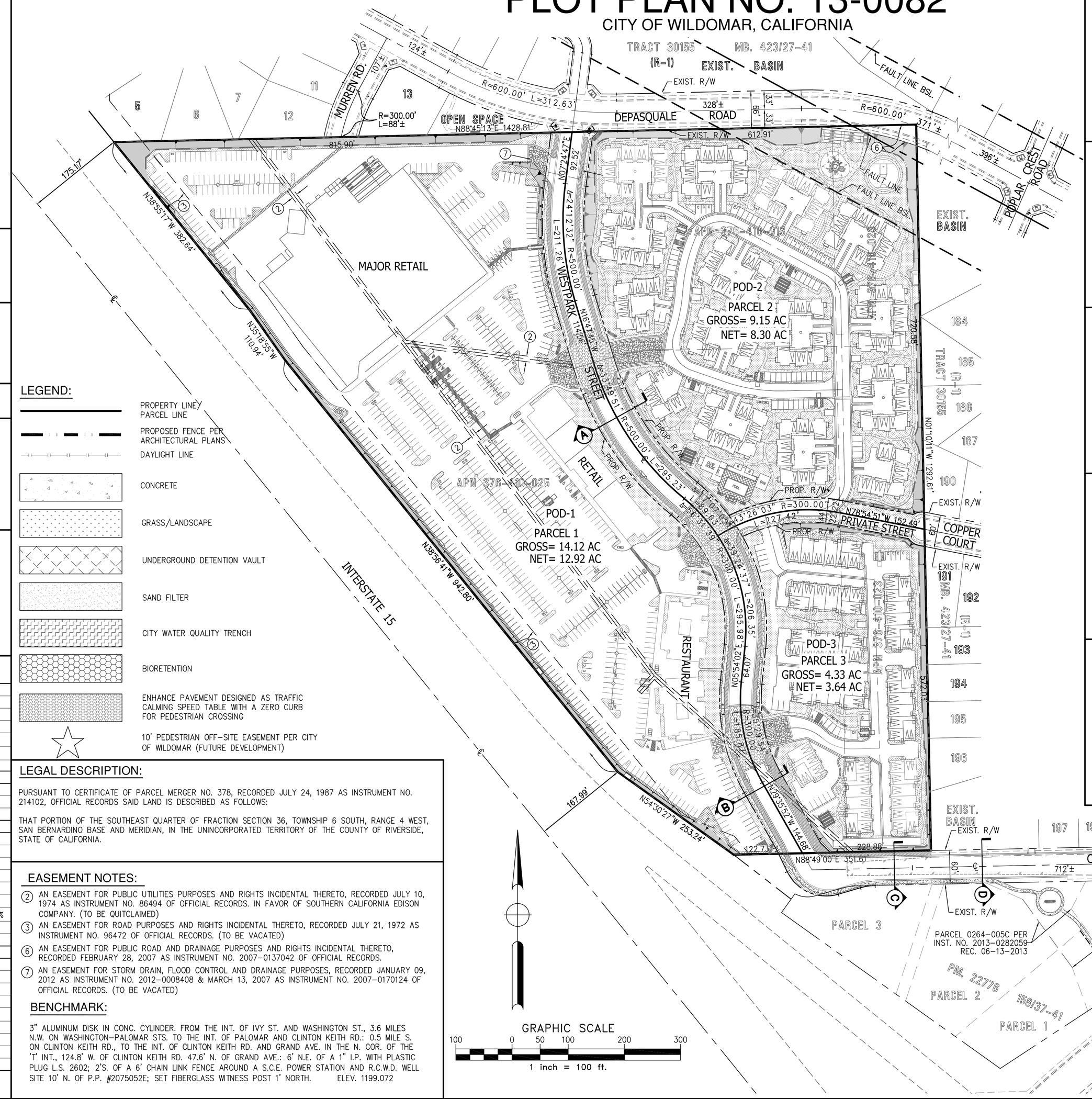

LEGEND:

- PROPERTY LINE/ PARCEL LINE
- PROPOSED FENCE PER ARCHITECTURAL PLANS
- DAYLIGHT LINE
- CONCRETE
- GRASS/LANDSCAPE
- UNDERGROUND DETENTION VAULT
- SAND FILTER
- CITY WATER QUALITY TRENCH
- BIORETENTION
- ENHANCE PAVEMENT DESIGNED AS TRAFFIC CALMING SPEED TABLE WITH A ZERO CURB FOR PEDESTRIAN CROSSING
- 10' PEDESTRIAN OFF-SITE EASEMENT PER CITY OF WILDOMAR (FUTURE DEVELOPMENT)

LEGAL DESCRIPTION:

PURSUANT TO CERTIFICATE OF PARCEL MERGER NO. 378, RECORDED JULY 24, 1987 AS INSTRUMENT NO. 214102, OFFICIAL RECORDS SAID LAND IS DESCRIBED AS FOLLOWS:

THAT PORTION OF THE SOUTHEAST QUARTER OF FRACTION SECTION 36, TOWNSHIP 6 SOUTH, RANGE 4 WEST, SAN BERNARDINO BASE AND MERIDIAN, IN THE UNINCORPORATED TERRITORY OF THE COUNTY OF RIVERSIDE, STATE OF CALIFORNIA.

EASEMENT NOTES:

(2) AN EASEMENT FOR PUBLIC UTILITIES PURPOSES AND RIGHTS INCIDENTAL THERETO, RECORDED JULY 10, 1974 AS INSTRUMENT NO. 86494 OF OFFICIAL RECORDS. IN FAVOR OF SOUTHERN CALIFORNIA EDISON COMPANY. (TO BE QUITCLAIMED)

(3) AN EASEMENT FOR ROAD PURPOSES AND RIGHTS INCIDENTAL THERETO, RECORDED JULY 21, 1972 AS INSTRUMENT NO. 96472 OF OFFICIAL RECORDS. (TO BE VACATED)

(6) AN EASEMENT FOR PUBLIC ROAD AND DRAINAGE PURPOSES AND RIGHTS INCIDENTAL THERETO, RECORDED FEBRUARY 28, 2007 AS INSTRUMENT NO. 2007-0137042 OF OFFICIAL RECORDS.

(7) AN EASEMENT FOR STORM DRAIN, FLOOD CONTROL AND DRAINAGE PURPOSES, RECORDED JANUARY 09, 2012 AS INSTRUMENT NO. 2012-0008408 & MARCH 13, 2007 AS INSTRUMENT NO. 2007-0170124 OF OFFICIAL RECORDS. (TO BE VACATED)

BENCHMARK:

3" ALUMINUM DISK IN CONC. CYLINDER. FROM THE INT. OF IVY ST. AND WASHINGTON ST., 3.6 MILES N.W. ON WASHINGTON-PALOMAR STS. TO THE INT. OF PALOMAR AND CLINTON KEITH RD.: 0.5 MILE S. ON CLINTON KEITH RD., TO THE INT. OF CLINTON KEITH RD. AND GRAND AVE. IN THE N. COR. OF THE "T" INT., 124.8' W. OF CLINTON KEITH RD. 47.6' N. OF GRAND AVE.: 6' N.E. OF A 1" I.P. WITH PLASTIC PLUG L.S. 2602; 2'S. OF A 6' CHAIN LINK FENCE AROUND A S.C.E. POWER STATION AND R.C.W.D. WELL SITE 10' N. OF P.P. #2075052E; SET FIBERGLASS WITNESS POST 1' NORTH. ELEV. 1199.072

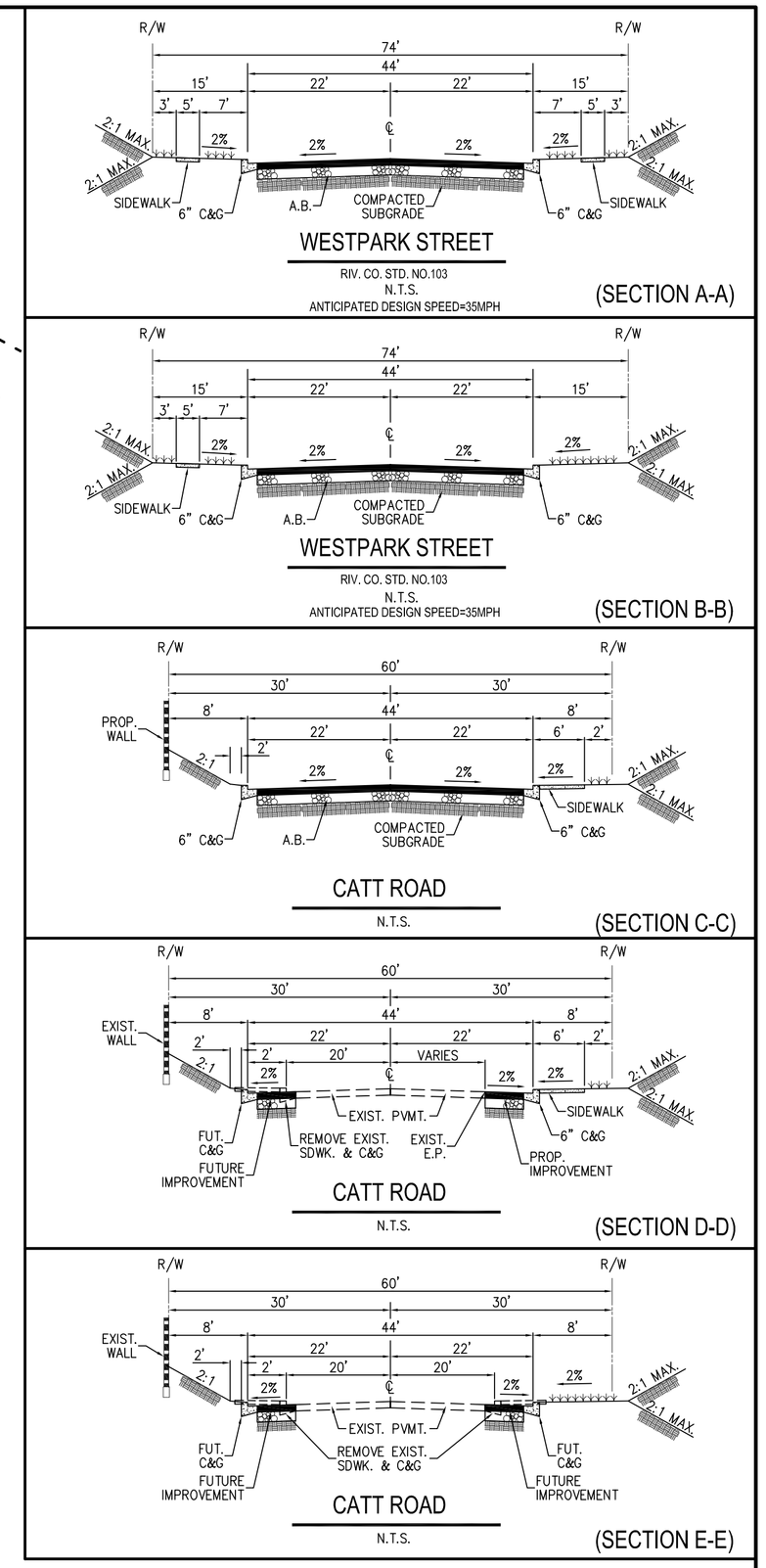

DIGALERT
DIAL BEFORE YOU DIG
TWO WORKING DAYS BEFORE YOU DIG
TOLL FREE 1-800-227-2600
A PUBLIC SERVICE BY UNDERGROUND SERVICE ALERT

NOTE:
WORK CONTAINED WITHIN THESE PLANS SHALL NOT COMMENCE UNTIL AN ENCROACHMENT PERMIT AND/OR A GRADING PERMIT HAS BEEN ISSUED.

The private engineer signing these plans is responsible for assuring the accuracy and acceptability of the design hereon. In the event of discrepancies arising after city acceptance or during construction, the private engineer shall be responsible for determining an acceptable solution and revising the plans for acceptance by the city.

MARK	BY	DATE	REVISIONS	APPR.	DATE
ENGINEER				CITY	

CITY OF WILDOMAR
ACCEPTED BY:
Date:
DANIEL A. YORK, Asst. City Manager
Public Works Director/City Engineer
ACCEPTANCE AS TO CONFORMANCE WITH APPLICABLE CITY STANDARDS AND PRACTICES

SEAL-ENGINEER:
REGISTERED PROFESSIONAL ENGINEER TRAVIS P. VINCENT JR. No. 37356 Exp. 6/30/16 CIVIL STATE OF CALIFORNIA

PACIFIC COAST LAND CONSULTANTS, Inc.
CIVIL ENGINEERING • LAND PLANNING • LAND SURVEYING
25096 JEFFERSON AVENUE SUITE "D"
MURRIETA, CALIFORNIA 92562
TEL. (951) 698-1350

PREPARED BY: TRAVIS P. VINCENT JR.
R.C.E. No. 37356 EXP. 6-30-16

BENCHMARK: (SEE ABOVE)

SCALE: H: As Noted V: As Noted

PLOT PLAN NO. 13-0082
CITY OF WILDOMAR
WESTPARK PROMENADE
TITLE SHEET

SHEET No. 6 OF 10 SHTS

S:\Land Projects 2004\27210 CLINTON KEITH 26\DWG\22-PLOT PLAN\PP_SHT1.dwg 7-19-16 09:41:59 AM

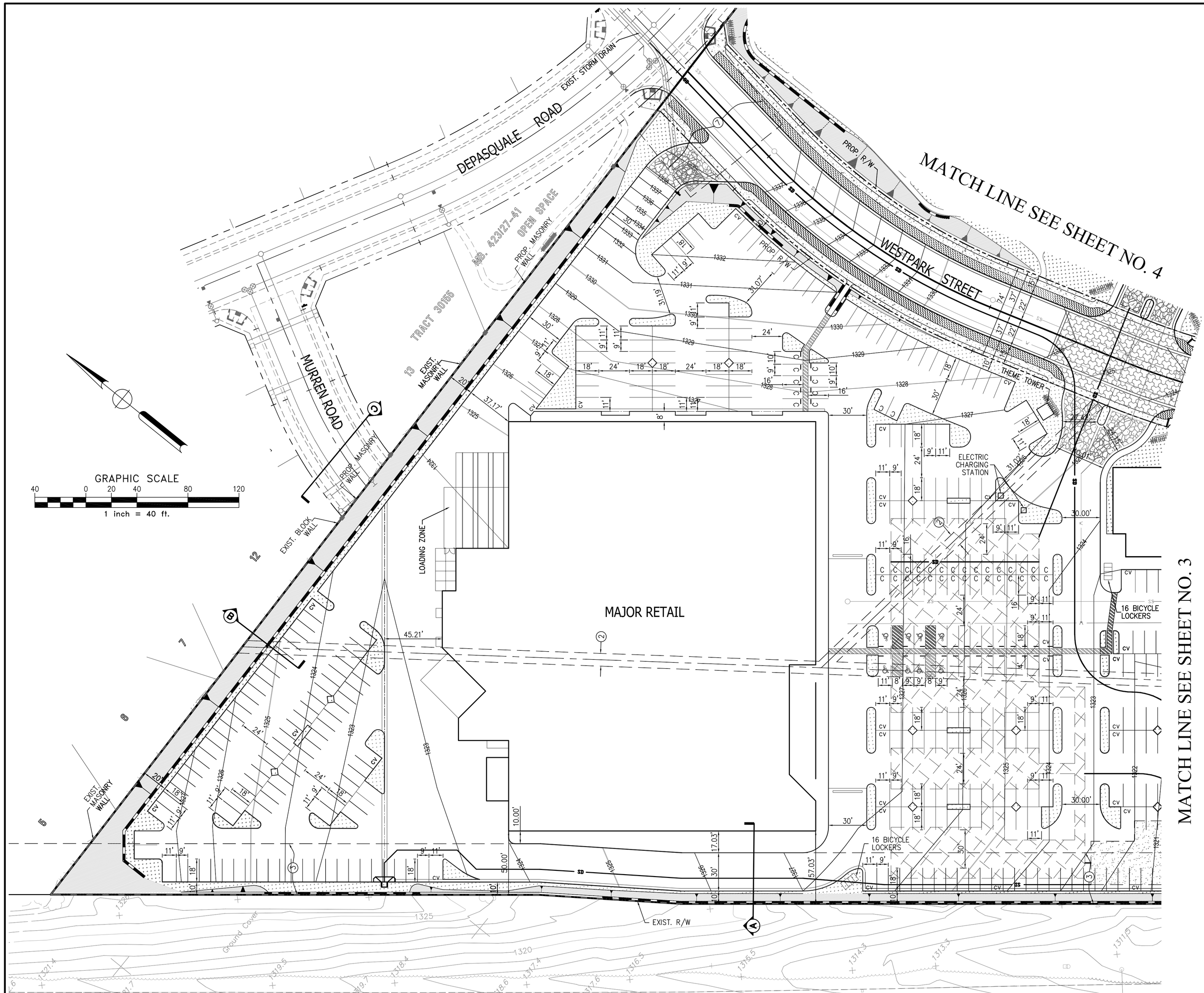

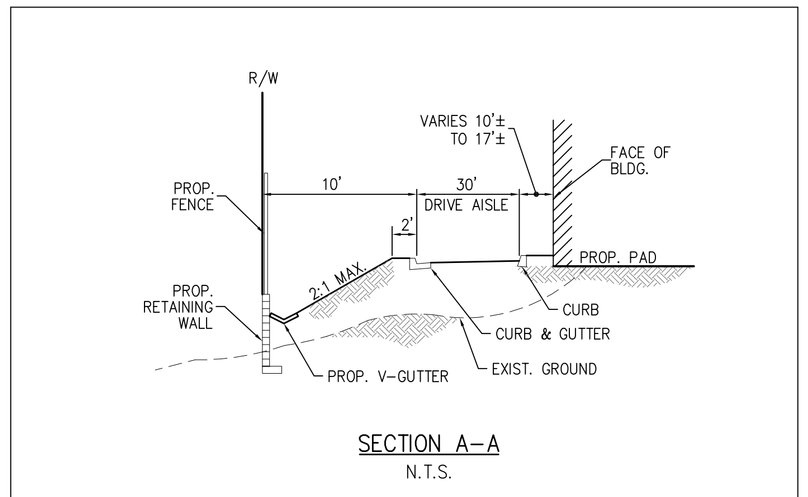

SECTION A–A
N.T.S.

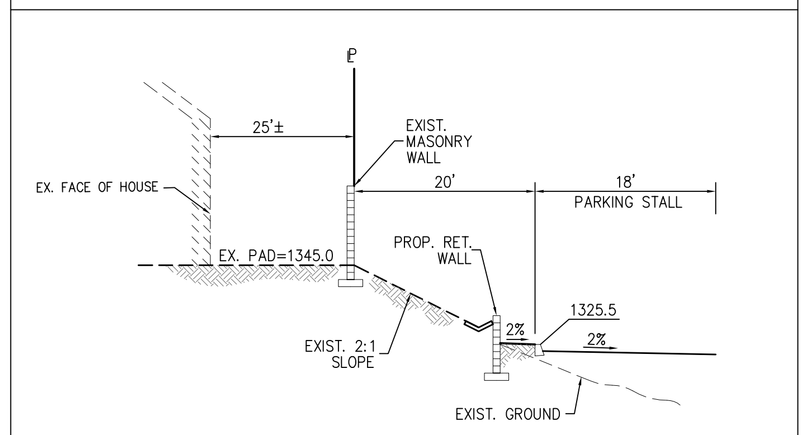

SECTION B–B
N.T.S.

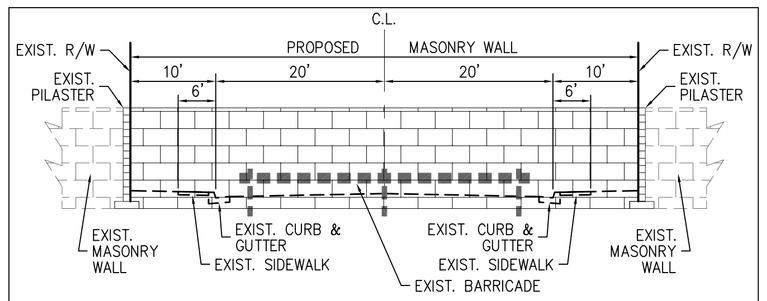

SECTION C–C
N.T.S.

LEGEND:

- C – COMPACT
- CV – CLEAN AIR/VANPOOL/EV
- BR – BICYCLE RACK
- MB – MAIL BOX
- ♿ – ADA PARKING

POD-1 / PARCEL 1
GROSS = 14.12 AC
NET = 12.92 AC
APN: 376–410–025

POD-1 COMMERCIAL PARKING BREAKDOWN					
REQUIRED					
MAJOR RETAIL & RETAIL			SINGLE STORY RESTAURANTS (8,000SF EA. x 2)		
	SPACES	S.F.		SPACES	S.F.
NET. S.F. AREAS MAJOR RETAIL & RETAIL	566	101,000	DINING AREAS 3,870 SFx 2 RESTAURANTS	172	7,740
			EMPLOYEE PARKING REQ'D. @ 1 SPACE/2 EMPLOYEES	18	–
SUBTOTAL	566	101,000		190	
TOTAL	756				
PROVIDED					
	GREEN VEHICLE PARKING & (2) ELECTRIC CHARGING STATION	COMPACT	STANDARD	ADA (DISABLED)	
SUBTOTAL	61	46	674	16	
GRAND TOTAL PARKING	797				
BICYCLE PARKING PROVIDED: (4) AREAS EACH WITH 2 STACKED 16 UNIT LOCKERS. TOTAL: 64 INDIVIDUAL ENCLOSED LOCKERS					
LOADING ZONES: 2 @ 10' X 35' EACH					

DIGALERT
DIAL BEFORE YOU DIG
TWO WORKING DAYS BEFORE YOU DIG
TOLL FREE 1-800-227-2600
A PUBLIC SERVICE BY UNDERGROUND SERVICE ALERT

NOTE:
WORK CONTAINED WITHIN THESE PLANS SHALL NOT COMMENCE UNTIL AN ENCROACHMENT PERMIT AND/OR A GRADING PERMIT HAS BEEN ISSUED.

The private engineer signing these plans is responsible for assuring the accuracy and acceptability of the design hereon. In the event of discrepancies arising after city acceptance or during construction, the private engineer shall be responsible for determining an acceptable solution and revising the plans for acceptance by the city.

MARK	BY	DATE	REVISIONS	APPR.	DATE
ENGINEER				CITY	

CITY OF WILDOMAR
ACCEPTED BY:
Date:
DANIEL A. YORK, Asst. City Manager
Public Works Director/City Engineer
ACCEPTANCE AS TO CONFORMANCE WITH APPLICABLE CITY STANDARDS AND PRACTICES

SEAL–ENGINEER:
REGISTERED PROFESSIONAL ENGINEER TRAVIS P. VINCENT JR. No. 37356 Exp. 6/30/16 CIVIL STATE OF CALIFORNIA

PACIFIC COAST LAND CONSULTANTS, Inc.
CIVIL ENGINEERING • LAND PLANNING • LAND SURVEYING
25096 JEFFERSON AVENUE SUITE "D"
MURRIETA, CALIFORNIA 92562
TEL. (951) 698-1350
PREPARED BY: TRAVIS P. VINCENT JR.
R.C.E. No. 37356 EXP. 6–30–16

BENCHMARK:
(SEE SHEET 1)
SCALE:
H: As Noted V: As Noted

PLOT PLAN NO. 13-0082
CITY OF WILDOMAR
WESTPARK PROMENADE
POD-1 / PARCEL 1

SHEET No. 7 OF 10 SHTS

S:\Land Projects 2004\27210 CLINTON KEITH 281\DWG\22-PLOT PLAN\PP_SHT_2.dwg 7-19-16 09:43:25 AM

MATCH LINE SEE SHEET NO. 4

MATCH LINE SEE SHEET NO. 2

MATCH LINE SEE SHEET NO. 5

WESTPARK STREET

COPPER COURT (PRIVATE ST.)

CATT ROAD

RETAIL

LOADING ZONE

MAIL BOX

16 BICYCLE LOCKERS

RESTAURANT 1

RESTAURANT 2

ELECTRIC CHARGING STATION

LOADING ZONE

FREEWAY PYLON SIGN

EXIST. R/W

PROP. R/W

INTERSTATE 15

LEGEND:

C	– COMPACT
CV	– CLEAN AIR/VANPOOL/EV
BR	– BICYCLE RACK
MB	– MAIL BOX
♿	– ADA PARKING

POD-1 / PARCEL 1
GROSS = 14.12 AC
NET = 12.92 AC
APN: 376-410-025

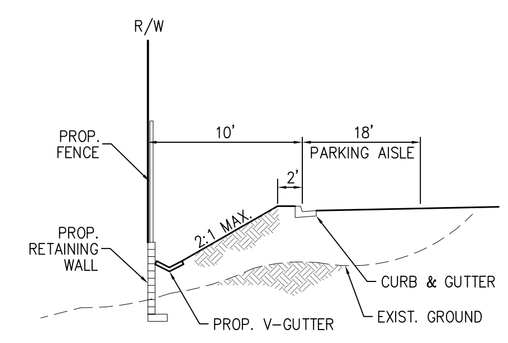

SECTION A–A
N.T.S.

GRAPHIC SCALE
40 0 20 40 80 120
1 inch = 40 ft.

DIGALERT
DIAL BEFORE YOU DIG
TWO WORKING DAYS BEFORE YOU DIG
TOLL FREE 1-800-227-2600
A PUBLIC SERVICE BY UNDERGROUND SERVICE ALERT

NOTE:
WORK CONTAINED WITHIN THESE PLANS SHALL NOT COMMENCE UNTIL AN ENCROACHMENT PERMIT AND/OR A GRADING PERMIT HAS BEEN ISSUED.

The private engineer signing these plans is responsible for assuring the accuracy and acceptability of the design hereon. In the event of discrepancies arising after city acceptance or during construction, the private engineer shall be responsible for determining an acceptable solution and revising the plans for acceptance by the city.

MARK	BY	DATE	REVISIONS	APPR.	DATE
ENGINEER				CITY	

CITY OF WILDOMAR
ACCEPTED BY:
Date:
DANIEL A. YORK, Asst. City Manager
Public Works Director/City Engineer
ACCEPTANCE AS TO CONFORMANCE WITH APPLICABLE CITY STANDARDS AND PRACTICES

SEAL–ENGINEER:
REGISTERED PROFESSIONAL ENGINEER TRAVIS P. VINCENT JR. No. 37356 Exp. 6/30/16 CIVIL STATE OF CALIFORNIA

PACIFIC COAST LAND CONSULTANTS, Inc.
CIVIL ENGINEERING • LAND PLANNING • LAND SURVEYING
25096 JEFFERSON AVENUE SUITE "D"
MURRIETA, CALIFORNIA 92562
TEL. (951) 698-1350

PREPARED BY: TRAVIS P. VINCENT JR.
R.C.E. No. 37356 EXP. 6-30-16

BENCHMARK:
(SEE SHEET 1)

SCALE:
H: As Noted V: As Noted

PLOT PLAN NO. 13-0082
CITY OF WILDOMAR
WESTPARK PROMENADE
POD-1 / PARCEL 1

SHEET No. 8
OF 10 SHTS

S:\Land Projects 2004\27210 CLINTON KEITH 283\DWG\22-PLOT PLAN\PP_SHT_3.dwg 7-19-16 09:44:38 AM

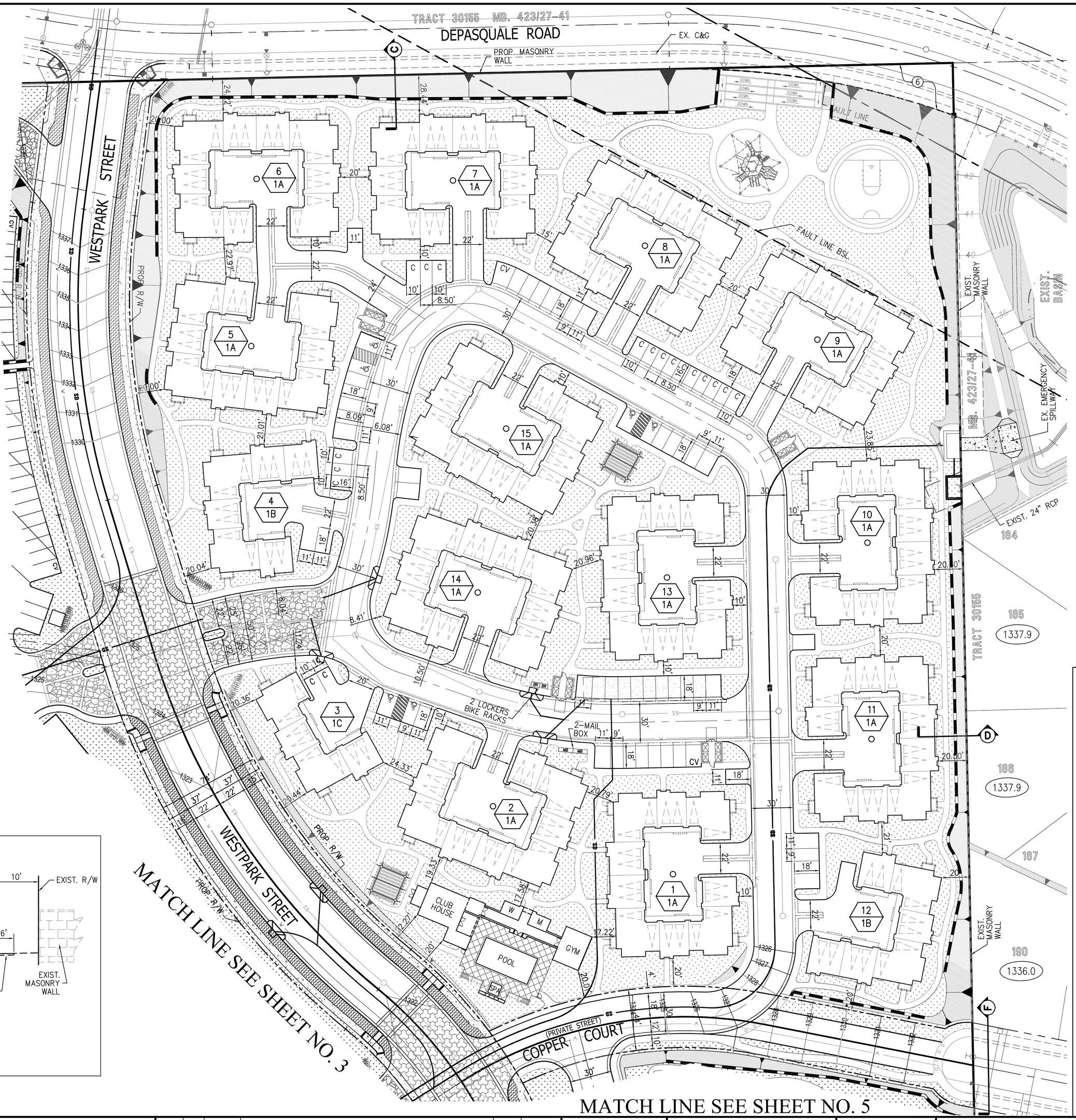

GRAPHIC SCALE

40 0 20 40 80 120

1 inch = 40 ft.

POD-2 / PARCEL 2
GROSS = 9.15 AC
NET = 8.30 AC
APN: 376-410-013
376-410-023
376-410-025

LEGEND:

- C – COMPACT
- CV – CLEAN AIR/VANPOOL/EV
- BR – BICYCLE RACK
- MB – MAIL BOX
- ♿ – ADA PARKING
- 1 / 1A – POD BUILDING NO. / BUILDING TYPE

POD-2 PARKING BREAKDOWN

124 UNIT SINGLE FAMILY ATTACHED HOMES

UNIT TYPE	NO. OF UNIT	REQUIRED: 2BR UNITSx2.25 SPACES/UNIT	3BR UNITSx2.75 SPACES/UNIT	4BR UNITSx2.75 SPACES/UNIT
A	39	87.75	–	–
B	31	–	85.25	–
C	54	–	–	148.50
SUBTOTAL		87.75	85.25	148.50
TOTAL	124	321.50		

PROVIDED	ENCLOSED (2 CAR GARAGES)	COMPACT	STANDARD	ADA (DISABLED)
SUBTOTAL	248	18	50	6
GRAND TOTAL PARKING	322			

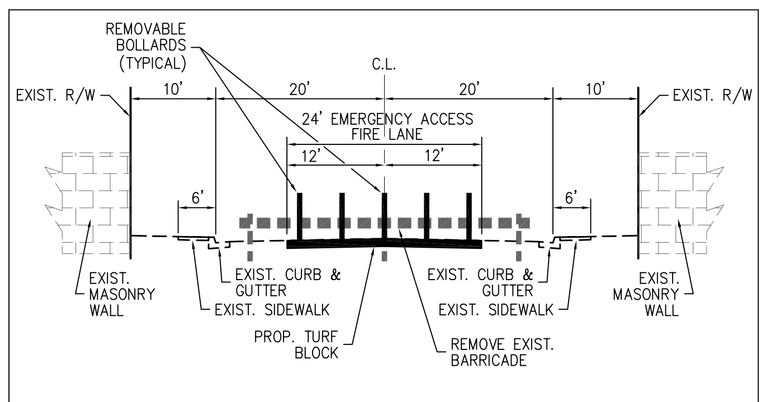

SECTION F–F

N.T.S.

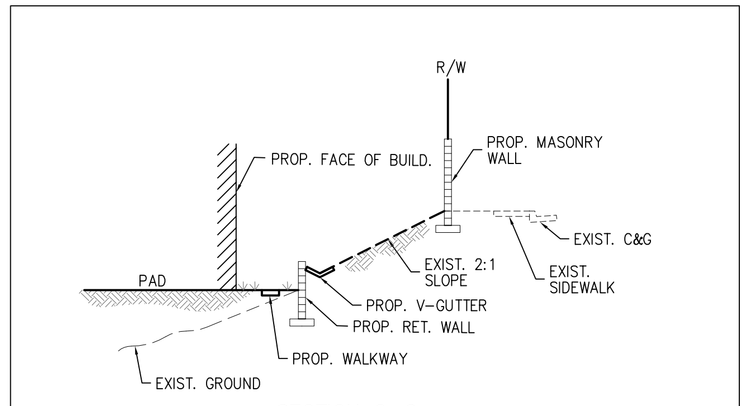

SECTION C–C

N.T.S.

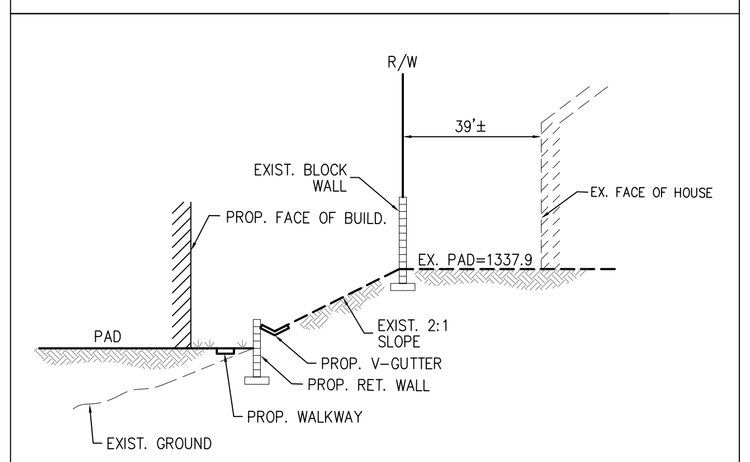

SECTION D–D

N.T.S.

BUILDING "1A" BUILDING "1B" BUILDING "1C"

BUILDING TYPE:

SCALE: 1"=30'

DIGALERT

DIAL BEFORE YOU DIG — TWO WORKING DAYS BEFORE YOU DIG

TOLL FREE 1-800-227-2600

A PUBLIC SERVICE BY UNDERGROUND SERVICE ALERT

NOTE:

WORK CONTAINED WITHIN THESE PLANS SHALL NOT COMMENCE UNTIL AN ENCROACHMENT PERMIT AND/OR A GRADING PERMIT HAS BEEN ISSUED.

The private engineer signing these plans is responsible for assuring the accuracy and acceptability of the design hereon. In the event of discrepancies arising after city acceptance or during construction, the private engineer shall be responsible for determining an acceptable solution and revising the plans for acceptance by the city.

MARK	BY	DATE	REVISIONS	APPR.	DATE
ENGINEER				CITY	

CITY OF WILDOMAR

ACCEPTED BY:

Date:

DANIEL A. YORK, Asst. City Manager
Public Works Director/City Engineer

ACCEPTANCE AS TO CONFORMANCE WITH APPLICABLE CITY STANDARDS AND PRACTICES

SEAL–ENGINEER:

REGISTERED PROFESSIONAL ENGINEER TRAVIS P. VINCENT JR. No. 37356 Exp. 6/30/16 CIVIL STATE OF CALIFORNIA

PACIFIC COAST LAND CONSULTANTS, Inc.
CIVIL ENGINEERING • LAND PLANNING • LAND SURVEYING
25086 JEFFERSON AVENUE SUITE "D"
MURRIETA, CALIFORNIA 92562
TEL. (951) 698-1350

PREPARED BY: TRAVIS P. VINCENT JR.

R.C.E. No. 37356 EXP. 6-30-16

BENCHMARK:

(SEE SHEET 1)

SCALE: H: As Noted V: As Noted

PLOT PLAN NO. 13-0082

CITY OF WILDOMAR

WESTPARK PROMENADE

POD-2 / PARCEL 2

SHEET No. 9 OF 10 SHTS

S:\Land Projects 2004\27210 CLINTON KEITH 26\DWG\22-PLOT PLAN\PP_SHT_4.dwg 7-19-16 09:45:53 AM

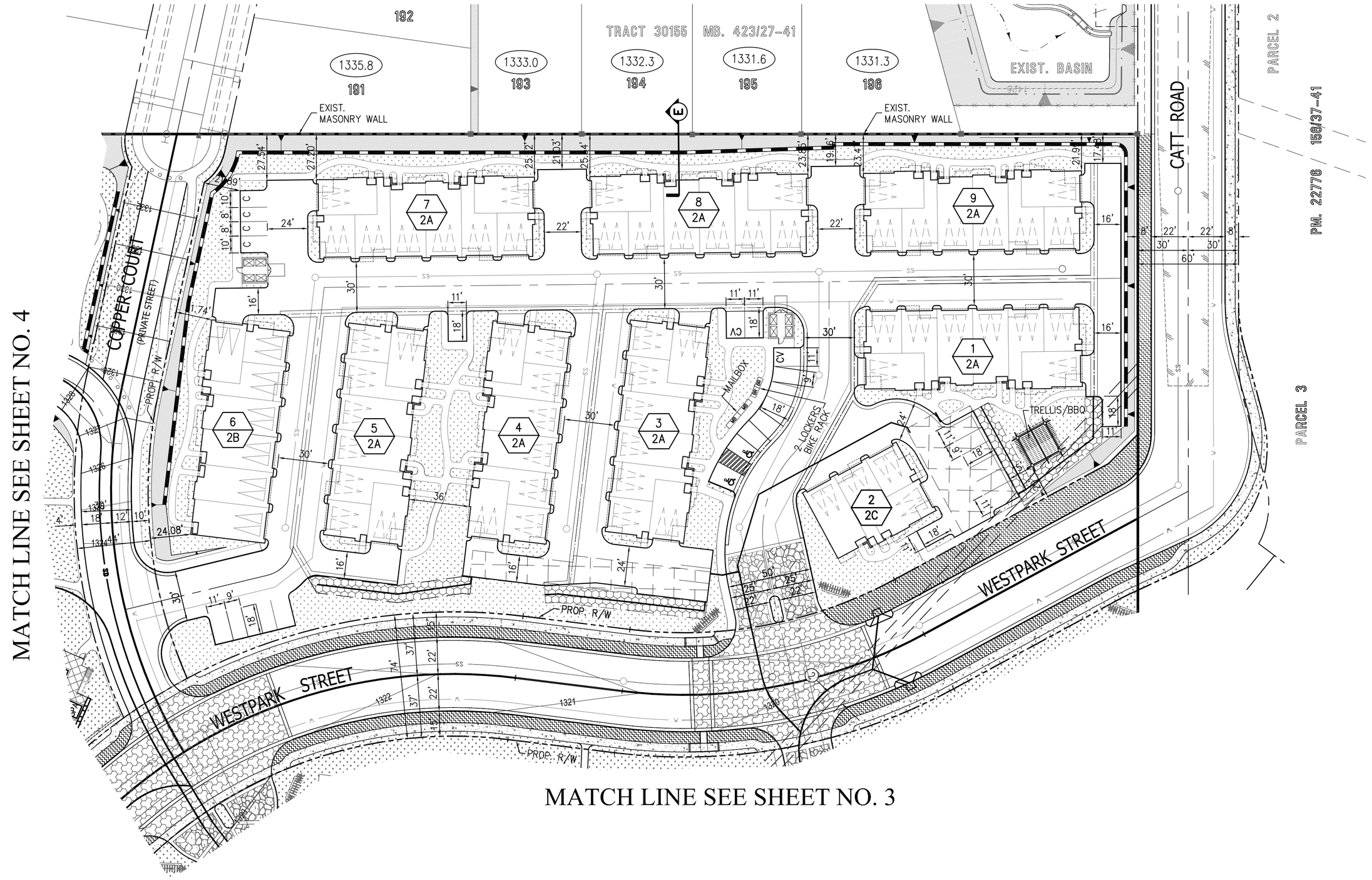

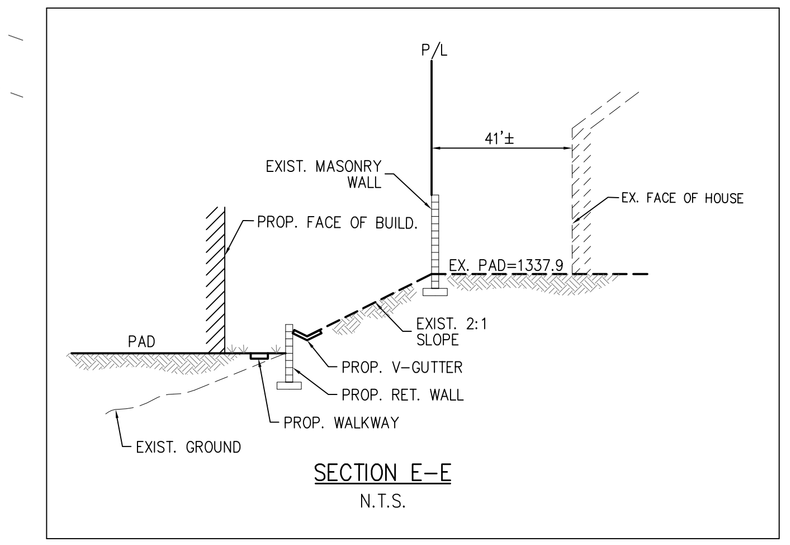

SECTION E-E
N.T.S.

POD-3 / PARCEL 3
GROSS = 4.33 AC
NET = 3.64 AC
APN: 376-410-023
376-410-025

LEGEND:

- C – COMPACT
- CV – CLEAN AIR/VANPOOL/EV
- BR – BICYCLE RACK
- MB – MAIL BOX
- ♿ – ADA PARKING
- 2 / 2A – POD BUILDING NO. / BUILDING TYPE

POD-3 PARKING BREAKDOWN				
67 UNIT SINGLE FAMILY ATTACHED HOMES				
		REQUIRED		
UNIT TYPE	NO. OF UNIT	2BR UNITSx2.25 SPACES/UNIT	3BR UNITSx2.75 SPACES/UNIT	
A	16	36	–	
B	16	36	–	
C	16	36	–	
D	19	–	52.25	
SUBTOTAL		108	52.25	
TOTAL	67	160.25		
PROVIDED				
	ENCLOSED (2 CAR GARAGES)	COMPACT	STANDARD	ADA (DISABLED)
SUBTOTAL	134	4	25	2
GRAND TOTAL PARKING	165			

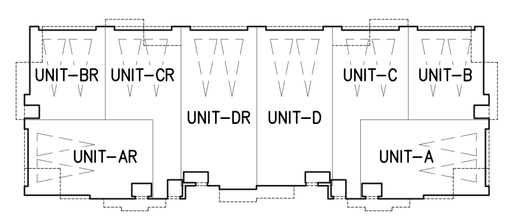

BUILDING "2A"

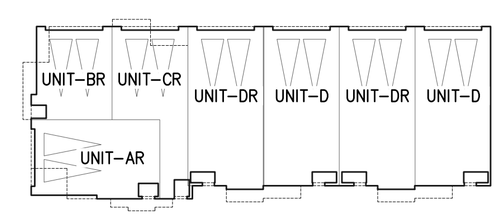

BUILDING "2B"

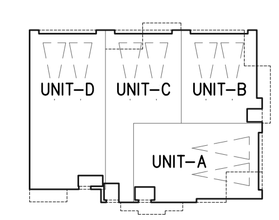

BUILDING "2C"

BUILDING TYPE:
SCALE: 1"=30'

GRAPHIC SCALE
40 0 20 40 80 120
1 inch = 40 ft.

DIGALERT
DIAL BEFORE YOU DIG
TWO WORKING DAYS BEFORE YOU DIG
TOLL FREE 1-800-227-2600
A PUBLIC SERVICE BY UNDERGROUND SERVICE ALERT

NOTE:
WORK CONTAINED WITHIN THESE PLANS SHALL NOT COMMENCE UNTIL AN ENCROACHMENT PERMIT AND/OR A GRADING PERMIT HAS BEEN ISSUED.

The private engineer signing these plans is responsible for assuring the accuracy and acceptability of the design hereon. In the event of discrepancies arising after city acceptance or during construction, the private engineer shall be responsible for determining an acceptable solution and revising the plans for acceptance by the city.

MARK	BY	DATE	REVISIONS	APPR.	DATE
ENGINEER				CITY	

CITY OF WILDOMAR
ACCEPTED BY:
Date:
DANIEL A. YORK, Asst. City Manager
Public Works Director/City Engineer
ACCEPTANCE AS TO CONFORMANCE WITH APPLICABLE CITY STANDARDS AND PRACTICES

SEAL–ENGINEER:
REGISTERED PROFESSIONAL ENGINEER TRAVIS P. VINCENT JR. No. 37356 Exp. 6/30/16 CIVIL STATE OF CALIFORNIA

PACIFIC COAST LAND CONSULTANTS, Inc.
CIVIL ENGINEERING • LAND PLANNING • LAND SURVEYING
25096 JEFFERSON AVENUE, SUITE "D"
MURRIETA, CALIFORNIA 92562
TEL (951) 698-1350
PREPARED BY: TRAVIS P. VINCENT JR.
R.C.E. No. 37356 EXP. 6-30-16

BENCHMARK:
(SEE SHEET 1)
SCALE: H: As Noted V: As Noted

PLOT PLAN NO. 13-0082
CITY OF WILDOMAR
WESTPARK PROMENADE
POD-3 / PARCEL 3

SHEET No. 10
OF 10 SHTS

S:\Land Projects 2004\27210 CLINTON KEITH 26\DWG\22-PLOT PLAN\PP_SHT_5.dwg 7-19-16 09:46:58 AM

PARKING EXHIBIT PLAN

CITY OF WILDOMAR, CALIFORNIA

LEGEND:

- PROPERTY LINE/ PARCEL LINE
- PROPOSED RIGHT OF WAY
- OPEN PARKING
- SIDEWALKS
- ENCLOSED GARAGE
- ENCHANCED STAMPED CONCRETE PAVEMENT
- GRASS/LANDSACPE
- 1 / 1A — POD/BUILDING NO. / BUILDING TYPE

GRAPHIC SCALE

80 0 40 80 160 240

1 inch = 80 ft.

DIGALERT

DIAL BEFORE YOU DIG — TWO WORKING DAYS BEFORE YOU DIG

TOLL FREE 1-800-227-2600

A PUBLIC SERVICE BY UNDERGROUND SERVICE ALERT

NOTE:

WORK CONTAINED WITHIN THESE PLANS SHALL NOT COMMENCE UNTIL AN ENCROACHMENT PERMIT AND/OR A GRADING PERMIT HAS BEEN ISSUED.

The private engineer signing these plans is responsible for assuring the accuracy and acceptability of the design hereon. In the event of discrepancies arising after city acceptance or during construction, the private engineer shall be responsible for determining an acceptable solution and revising the plans for acceptance by the city

MARK	BY	DATE	REVISIONS	APPR.	DATE
ENGINEER				CITY	

CITY OF WILDOMAR

ACCEPTED BY:

Date:

DANIEL YORK, Director of Public Works

ACCEPTANCE AS TO CONFORMANCE WITH APPLICABLE CITY STANDARDS AND PRACTICES

SEAL: PROFESSIONAL LAND SURVEYOR — HEUNG JEI KIM — EXP. 12-31-16 — No. 5928 — STATE OF CALIFORNIA

PACIFIC COAST LAND CONSULTANTS, Inc.
CIVIL ENGINEERING • LAND PLANNING • LAND SURVEYING
25096 JEFFERSON AVENUE SUITE "D"
MURRIETA, CALIFORNIA 92562
TEL. (951) 698-1350

PREPARED BY: HEUNG JEI KIM

P.L.S. No. 5928 EXP. 12-31-16

CITY OF WILDOMAR

WESTPARK PROMENADE

PARKING EXHIBIT PLAN

SHEET No. 1 OF 1 SHTS

S:\Land Projects 2004\27210 CLINTON KEITH 28\DWG\15-EXHIBITS\PARKING\PARKING EXHIBIT_A.dwg 10-21-16 08:16:58 AM